Technical Manual

11 3/4" CLINCHER® *Type Two* BUCKING UNIT

Model Number CLEBU1175-21

SUPERIOR Electrically Driven Hydraulic Power Unit

Model EPP-1100
30 HP, 3000 PSI, 13.4/38.5 GPM

4225 Highway 90, East
Broussard, Louisiana 70518
Phone: (337) 837-8847
Fax: (337) 837-8839
www.superior-manf.com

©Copyright, 2000, SUPERIOR Manufacturing & Hydraulics, Inc. All rights reserved. This document is the property of SUPERIOR Manufacturing & Hydraulics, Inc. It is supplied as reference information to users of our products. This document is considered confidential and is not to be disclosed, copied or reproduced, transmitted, transcribed in any form or stored in any type of system without the express written consent of SUPERIOR Manufacturing & Hydraulics, Inc.

CLINCHER®, **LOCKJAW™** & **GRIT FACE™** are trademarks of SUPERIOR Manufacturing & Hydraulics, Inc.

The products described in this manual are covered by U.S. and foreign Patents and/or pending Patent Applications.

This manual is not a controlled document and is subject to revision without notice. To receive updates and insure you have access to the latest information concerning the CLINCHER® Bucking Unit, we request you complete this form and return the lower half to SUPERIOR Manufacturing and Hydraulics, Inc. by mail or facsimile.

Name: _____

Company: _____

Address: _____

Address: _____

City: _____ State: _____

Postal Code: _____ Country: _____

Telephone: _____ Fax: _____

Model No.: _____ Work Order Number: _____

Serial No.: _____ Assembly Date: _____

CLINCHER® Bucking Unit Technical Manual Registration Form

Name: _____

Company: _____

Address: _____

Address: _____

City: _____ State: _____

Postal Code: _____ Country: _____

Telephone: _____ Fax: _____

Model No.: _____ Work Order No.: _____

Serial No.: _____ Assembly Date: _____

Return To:

Superior Mfg. & Hyd.
4225 Hwy. 90 East
Broussard, LA 70518
USA

Phone: 337-837-8847
Facsimile: 337-837-8839
Web Site: www.superior-manf.com

TABLE OF CONTENTS

Hazard Warnings	*1*
Description, Illustrations, Specifications, & Certificate of Origin/Conformance	*2*
Wrap Around Die Selection	*3*
Installation Instructions	*4*
Controls, Operating Instructions, & Hydraulic Schematic	*5*
Maintenance Instructions & Trouble Shooting	*6*
11 3/4" Bucking Unit Parts Lists	*7*
Options and Accessories	*8*
Bucking Unit Component Illustrations	*9*
Motor Service Manuals, Pump Service Manual & Technical Data	*10*
Gear Reducer Manual	*11*
Control Valve Technical Data	*12*
Hydraulic Power Unit Parts List & Illustrations	*13*
Hydraulic Power Unit Component Information	*14*

11 3/4" CLINCHER® *Type Two* BUCKING UNIT

REVISION TABLE			
Section	***Page***	***Date***	***Description***
3	3	04/02	Corrected PN's for steel & aluminum dies, from BUC1175-xxxx to CLE1175 & BUCA1175-xxxx to CLEA1175
9	3, 5-7, 11	04/02	Revised Dwgs. Gear Box Assy., Backup Assy., Inside & Outside Door Assy., & Carriage Assy.
6	1	04/29/03	Added Product Bulletin SPB03-04-29.
3	3	09/03	Corrected PN's for steel dies from CLE1175 to CLEBU1175 and in the example BUC11750 to CLEBU1175.

HAZARD WARNING

Nomenclature used in this manual:

WARNING Concerns an operating procedure or practice that, if not strictly observed, can result in injury to personnel or loss of life.

Caution Concerns an operating procedure or practice that, if not strictly observed, can result in damage to or destruction of equipment.

Note Concerns an operating procedure or practice that needs highlighting.

CLINCHER® Bucking Units are manufactured to provide a means of making up or breaking out high torque tubular connections. They utilize high pressure hydraulic fluid power which can cause the unit to move suddenly and with great force if not properly anchored. The pipe can also move when the unit is not anchored and if the pipe is bent or is not adequately supported. **CLINCHER®** Bucking Units contain rotating and reciprocating parts which can severely or fatally injure personnel who are operating, repairing, or near this equipment during its operation.

WARNING: Bucking Units and Power Units must be maintained and operated by trained personnel. Personnel with diminished physical or mental capacity must not operate this equipment. No work of any type, including changing of dies, is to be carried out while the Bucking Unit is connected to the Hydraulic Power Unit.

CLINCHER® Bucking Units and Hydraulic Power Units utilize high pressure hydraulic fluids. Portions of the unit, control valves, hydraulic lines and cylinders may contain high pressure fluid even when the Power Unit is de-energized and the fluid supply hoses are disconnected. During normal operation the temperature of the hydraulic fluids as well as hoses, piping, valves, etc., can rise to a level which can cause burns.

WARNING: Personal protective gear including safety glasses, face shields, protective gloves and protective clothing must be worn to guard against the hazards of high pressure fluids. Tight fitting clothing is required to prevent entanglement in rotating components. These units should be serviced by thoroughly trained and qualified hydraulic technicians using procedures to safely insure hydraulic pressure is bled from these circuits.

No attempt should be made to operate the **CLINCHER®** Bucking Unit for any purpose other than which it is intended. This system is capable of generating very large clamping forces and torsional loads which, if improperly applied or controlled, could result in damage to the tubular, to the Bucking Unit, or could possibly result in injury or death of personnel. Do not attempt to operate the unit without correct dies and the proper size tubular being in the tong and backup sections of the Bucking Unit. See Section 3 for more information concerning the selection and use of dies.

CAUTION: Operating this equipment without the correct size, type, and orientation of dies can result in damage to the equipment or tubulars being handled.

HYDRAULIC PRODUCT SAFETY

WARNING: Valve lever (spool) may "stick" (not center) under certain conditions allowing the hydraulic equipment to continue to operate and could cause serious injury, death or equipment failure.

VALVE SAFETY: Read and follow instructions carefully. Failure to observe instructions and guidelines may cause serious injury, death or equipment failure. A sticking valve (spool bind) may be caused by one or more of the following factors:

DIRTY OIL: Oil must be filtered to a minimum of 25 microns. Filters should be changed regularly - spin-on types after 50 hours of initial use and then after every two hundred fifty hours of use. Use of a condition indicator is recommended. Consult your tractor or implement owner's manual for filtration and changing recommendations for internal systems.

OIL REQUIREMENTS: Premium quality anti-wear type oil with a viscosity between 100 and 200 SSU at operating temperatures. Certain synthetic oils may cause spool seals to swell and the valve to stick. If in doubt, call CROSS Engineering.

IMPROPER HOOK UP OR MOUNTING: Always use the proper size fittings. Hook up "in" & "out" as noted on the valve body. Do not overtorque pipe fittings. Mounting surfaces should be flat and care should be used when tightening mounting bolts. Over-tightened bolts can cause spool bind and casting breakage. When hooking a valve in series, always use a power beyond sleeve. Consult your tractor or implement manual to make sure you have the proper quick disconnect line connected to the inlet of the remote valve.

MISAPPLICATION: Always use the proper valve for the job. CONVERTA, CD, CS or CA valves should never be used for metered heavy load lifting - loaders or similar applications. Use an open center valve for open center applications and a closed center valve for closed applications. If in doubt, check with your tractor dealer. Contact CROSS if the valve allows the hydraulic equipment to creep excessively.

MAINTENANCE: Make sure all bolts are tightened and torqued to the recommended specification. Bent or broken parts should not be used. Replace immediately. Always use exact replacements. Always protect valve spool from paint overspray.

Faulty quick disconnects can cause high back pressures and sticking spools. Check quick disconnects periodically to make sure they are functioning properly. If valve spool does not center or appears to stick, do not use!

PUMPS & MOTORS SAFETY:

A relief or bypass in your hydraulic system is necessary to prevent pump from breakage due to overpressurization. Use correct fittings and proper oil as noted in the technical service manual packed with each unit. Change oil as recommended by your implement or tractor manufacturer.

CYLINDER SAFETY:

Check clevis clearances before, during and after extending the cylinder and before using the cylinder under pressure to avoid possible injury, or bent or broken rods caused by binding. Never operate a cylinder above recommended pressures. Never use a cylinder as a safety device when transporting equipment.

PINHOLE LEAKS:

If you observe a pinhole leak, discontinue use of the component. If oil has penetrated your skin or contacted your eye, seek medical attention immediately!

DESCRIPTION

SUPERIOR Manufacturing & Hydraulics' **CLINCHER®** BUCKING UNITS are used to make up or break out tubular connections in a horizontal position. They are most frequently used in steel mills, pipe yards, or workshop environments. While they are readily transportable and can be trailer mounted, Bucking Units are not usually used at a drill site. For drill site applications, refer to our **CLINCHER®** MAKE/BREAK Tool Operating Manual for information regarding a compact high torque unit.

CLINCHER® BUCKING UNITS utilize the patented **CLINCHER®** Die System which features a self aligning spline system that wraps around the pipe providing coverage up to 330 degrees. The dies distribute the radial load over the largest possible area to minimize pipe stress and deformation. Three different types of dies are available. Our fine tooth steel dies provide the highest possible torque transmission with minimal pipe marking. Non-marking aluminum dies are available for use with fiberglass or corrosion resistant alloy (CRA) tubulars. **CLINCHER® GRIT FACE™** dies are available for chrome and stainless steel tubing applications where steel dies are not acceptable and which require greater torque capacity than non-marking aluminum dies can provide. Adapters which utilize Dovetail strip dies may be available on special order. See Section 3 for more information concerning Die selection and usage.

CLINCHER® BUCKING UNITS have three main components (see Photo 1):

(1) A powered, rotating tong assembly with hydraulically operated jaws which grip the tubular=s coupling.

(2) A non-rotating backup assembly with hydraulically operated jaws which grip the body of the tubular.

(3) A frame system which supports the first two items and contains the drive mechanisms and Bucking Unit Control Panel.

A separate hydraulic power unit supplies the required hydraulic power to drive the tong and operate jaws. Power Units are covered in a Sections 13 and 14 of this Operating Manual.

SUPERIOR Manufacturing & Hydraulics produces two different types of Bucking Units. ***Type One*** is primarily intended for use in pipe mills or pipe yards for the installation (make up) or removal (break out) of couplings. This unit will readily accommodate different sizes of tubulars while allowing the spacing between the tong and backup to be adjusted approximately two feet. When using this type of unit the couplings and tubulars must be fed through either the backup or tong into the other component.

The ***Type Two*** Bucking Unit (see Photo 1) is used for the make up or break out of tool assemblies which have varying diameters and lengths. The ***Type Two*** unit will readily accommodate different sizes of components. The tong and backup spacing can be adjusted from a few inches to many feet. The ***Type Two*** unit features a top loading, open style **LOCKJAW™** Backup to allow easy installation or removal of tubulars or tools using an overhead crane.

Photo 1

CLINCHER® BUCKING UNIT

SPECIFICATION for CLINCHER® BUCKING UNITS	
TOOL SIZE	**11 3/4**
Unit Style	Type II Unit w/ **LOCKJAW™** Backup
Backup Torque Gauge Handle	24" [1]
Min Tubular OD (in)	2.062
Max Tubular OD [2] (in)	11.750
Torque Rating (ft lbs)	35,000
Dies per Tong or Backup [3]	3
Drive Type	Hydraulic
Number of Drive Speeds	2
Max Hydraulic Power Unit Operating Pressure (psi)	3,000
Max Clamping Pressure (psi) Intensified using air operated pump	4,500

Important Notes:

1. **If diameter of loadcell changes, handle length will change.**
2. **The maximum tubular OD is the limit of the diameter which can be handled in this unit. The end user should carefully review the maximum diameter of the coupling for the tubular being handled to insure it can be accommodated in the CLINCHER® BUCKING UNIT. Contact the manufacturer if other diameters are required.**
3. **Dies and die adapters must be ordered separately.**

POWER UNIT CONDITION	BUCKING UNIT MODE	
	High Speed Low Torque	**Low Speed High Torque**
Low Pressure / High Volumn Max System Pressure 1,000 PSI Max Flow 28 GPM	7,500 ft lbs @ 7 RPM	15,000 ft lbs @ 3.5 RPM
High Pressure / Low Volumn Max System Pressure 2,500 PSI Max Flow 12 GPM	15,000 ft lbs @ 3 RPM	35,000 ft lbs @ 1.5 RPM

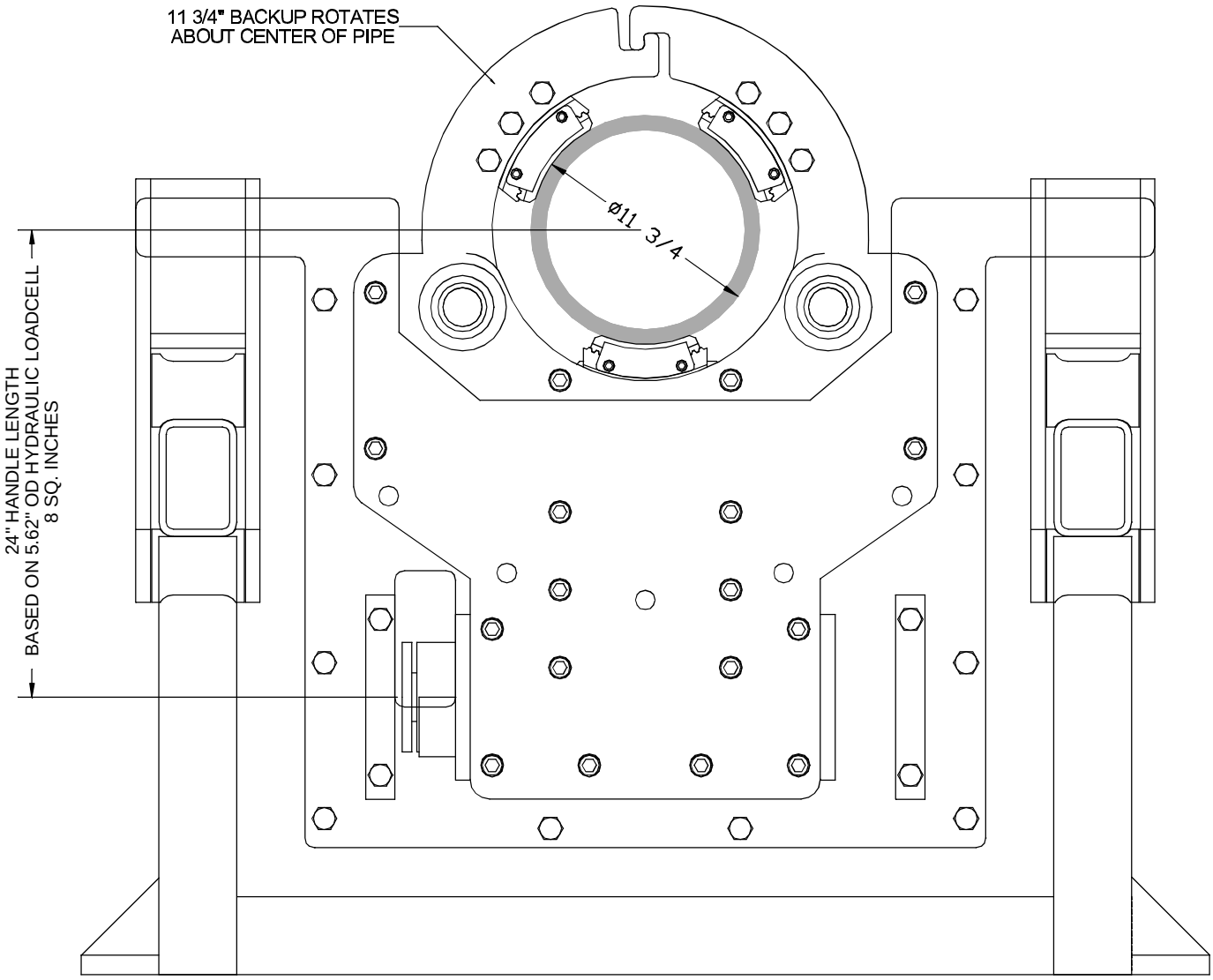

LOADCELL HANDLE

SUPERIOR Manufacturing & Hydraulics
4225 HWY. 90 EAST
BROUSSARD, LA 70518
(318) 837-8847

THIS DOCUMENT IS THE PROPERTY OF SUPERIOR MANUFACTURING & HYDRAULICS AND IS CONSIDERED CONFIDENTIAL. THIS INFORMATION MAY NOT BE USED, DISCLOSED, COPIED, OR REPRODUCED IN ANY FORM, WITHOUT THE EXPRESS WRITTEN CONSENT OF SUPERIOR MANUFACTURING & HYDRAULICS.

REV. #	LOG #	DATE
		05/10/00

REF: S:\Equip Manuals-Dwgs\CLEBU1175-21\Loadcell Hdle.wpg

CLINCHER® WRAP-AROUND DIES

CLINCHER® wrap around dies are available in three types:

Fine Toothed Steel Dies:	for low to ultra high torque applications on carbon steel tubulars including tubing, casing and drill pipe
Smooth Faced Aluminum Dies:	for low to moderate torque applications on fiberglass and corrosion resistant alloy (stainless steel) tubulars
GRIT FACE™ Dies:	for low to high torque applications on fiberglass and corrosion resistant alloy (stainless steel) tubulars where the use of steel dies is prohibited as well as on carbon steel tubulars where reduced marking is desired

CLINCHER® Bucking Units utilize wrap around dies to maximize pipe coverage allowing maximum torque transmission while minimizing marking and virtually eliminating the possibility of deforming the pipe. These tools have 3 or 4 jaws which accept our dies. **CLINCHER®** Dies are designed to match the OD of the tubing, casing, coupling or accessory being made up or broken out. Each die is stamped on the top or side to identify its size.

Using fine toothed steel dies which are slightly larger than the tubular is acceptable provided the difference in diameters is less than 3/32" (0.093"). The fine toothed steel dies we are providing for pipe and couplings are manufactured with an ID which is approximately 0.050" larger than the nominal die size. This provides a die which will readily grip pipe and couplings which are manufactured to API external diameter tolerances. In the case of pipe and couplings whose nominal OD is greater than 5 1/2", the API maximum diameter tolerance range can theoretically exceed the die diameter. Should this situation arise, the die will still grip the pipe but will have reduced contact area as the pipe may not contact the die along its midline. It is important to note we have not had any reports of die problems with extremely oversized tubulars. This is probably due to the fact that modern mills are able to control the OD of their products to much tighter tolerances than permitted by the API standards.

Aluminum and **GRIT FACE™** dies should be matched with the specific tubular diameters required. Our non-marking aluminum die system is manufactured with an ID which is 0.035" larger than the nominal die diameter. We have to use a closer fit between the nominal tubular and the die since this system relies on radial loads and the coefficient of friction instead of teeth. This clearance also allows the installation of our silicon carbide screen cloth which is required when using the non-marking system at high torques.
Note: The use of improperly sized dies can result in reduced torque capacity, increased pipe marking and reduced die life.

CLINCHER® WRAP-AROUND DIES

The bucking unit cylinders (which hold our dies) have considerable stroke which could cause some people to believe they can use a die on a tube which is significantly smaller than the nominal size. For example, someone could use a 7" die to grip on a non-standard tubular with an OD of 6.75". While one could successfully grip tubulars with such an arrangement, the pipe would not be exactly centered within the rotating and fixed portions of the bucking unit. The resulting eccentric pipe movement seen when rotating the collar could cause some variation in apparent torque readings. Therefore, we recommend nominal die sizes be matched to specific pipe or coupling diameters and using specially manufactured dies for non-standard premium couplings.

CAUTION: Do not attempt to grip tubular diameters which are larger than the dies being used. Failure to observe this precaution can result in damage to the tubular or the bucking unit.

CAUTION: Do not attempt to use combinations of different die sizes to accommodate a nonstandard tool joint or coupling OD when the correct size dies are not available. Using mismatched die sizes or different die types can cause the tubulars to run eccentrically resulting in erratic torque measurements. This can also initiate thread galling.

CLINCHER® Wrap-Around Dies are manufactured in specific diameters to match standard tubing and casing diameters, API coupling diameters, selected work string connection diameters and certain commonly used premium connection coupling diameters. **CLINCHER®** Wrap-Around Dies should not be used on tubulars which are larger than the nominal die size. Steel toothed dies can be used on tubulars which are no smaller than 3/32" (0.093") less than the nominal die size. Aluminum and **GRIT FACE™** dies should be matched with the specific tubular diameters required.

Note: Fine toothed steel dies in sizes 7 5/8" and smaller are normally stocked in our Broussard, Louisiana facility. Aluminum and **GRIT FACE™** Dies are normally made to order although a limited range of sizes and small quantities may be available from stock. Contact SUPERIOR Manufacturing & Hydraulics, Inc. for information concerning availability of stock, large diameter and special die sizes.

CLINCHER® WRAP-AROUND DIES

DIE Nomenclature for CLINCHER® Bucking Unit

CLEBU1175-xxxx	fine toothed steel dies available in sizes from 7 3/4" to 11 3/4"
CLEA1175-xxxx	aluminum dies available in sizes from 7 3/4" to 11 3/4"
BB1175-xxxx	**GRIT FACE™** dies (contact Superior f/ size availability)

Note when using dies on tubulars with OD of 7 5/8" or less it is necessary to install reducing adapters in the bucking unit cylinder. The adapter will accommodate smaller sizes listed below.

BUC 7625-xxxx	fine toothed steel dies available in sizes from 2 1/16" to 7 5/8"
BUCA 7625-xxxx	aluminum dies available in sizes from 2 1/16" to 7 5/8"
BB 7625-xxxx	**GRIT FACE™** dies available in sizes from 2 1/16" to 7 5/8"

ORDERING EXAMPLE: Fine toothed steel dies are needed to makeup 8 5/8" OD casing with 9 5/8" OD couplings
Qty. Req=d: Three pieces CLEBU1175-9625 (for tong assembly) and
Qty. Req=d: Three pieces CLEBU1175-8625 (for backup assembly)
(replace xxxx with size req=d in inches)

Contact SUPERIOR Manufacturing & Hydraulics, Inc. for information concerning availability of stock and special die sizes.

INSTALLATION INSTRUCTIONS

Remove all banding straps, protective coverings, etc., provided for shipping. **CLINCHER®** BUCKING UNITS must be installed on a foundation suitable for the weight of the unit plus the weight of the tubular being processed. Leveling jacks are not provided and may be required to insure the unit is supported on each of the four corners. Long bed Type II units must be securely anchored to the foundation using 3/4" anchor bolts.

HYDRAULIC FLUID

Unless specifically noted, all hydraulic power units are shipped without hydraulic oil. The SUPERIOR Hydraulic Power Units and the **CLINCHER®** BUCKING UNIT are designed to work with conventional industrial hydraulic oils. Superior Manufacturing & Hydraulics utilizes TEXACO Rando HD 68 hydraulic oil. Substitution of brands with comparable properties is acceptable. Use with synthetic, fire resistant or water based fluids should not be considered without consulting with SUPERIOR Manufacturing and Hydraulics. Quick disconnects are provided below the control console to facilitate easy hookup to the hydraulic power supply. No other power is required unless the optional electronic data acquisition/control system is being used.

CAUTION: Fill the hydraulic reservoir with the appropriate fluid and insure the suction isolation valve is open before starting power unit.

LUBRICATION

Unless specifically noted, the chain drive case is shipped without oil. Fill chain drive case with SAE 90 gear oil until even with sight glass. DO NOT OVERFILL. The capacity of the chain lube reservoir is approximately 5 US gallons. The fill port is located on the right side of the case when viewed from the front of the unit. The sight glass is located on the front of the cover slightly below the input shaft bearing. Using a grease gun, lubricate all grease fittings with a high quality bearing grease.

CAUTION: Fill the chain drive case with SAE 90 gear oil before starting power unit.

Refer to manufacturer=s literature for gear reducer (found in Section 11 of this manual) for information pertaining to lubrication requirements.

CAUTION: Check level of lubricant in gear reducer before starting power unit.

PRODUCT BULLETIN

SUBJECT: BUCKING UNIT OPERATING PROCEDURES

DATE: April 11, 2002

BULLETIN NO.: SPB02-04-11

REFERENCE: N/A

The basic procedures to be used when handling and bucking up collars on tubulars should be as follows:

1. Couplings should be started by hand on the pipe.

2. The pipe and coupling are moved by means of a crane or pipe roller system into the bucking unit to position the coupling within the tong section. It is very important that both the bucking unit and the pipe be level at this time.

3. The tong is then clamped on the coupling. The centering cylinder should rise until it just contacts the coupling. It should not stop short, nor should it push the coupling upward. If the tubular is excessively heavy, it may be necessary to adjust the setting of the sequence valve to insure the centering cylinder fully extends. As the pressure in the clamping system increases, the other two cylinders should start extending and moving downwards until they contact the pipe. It is important these two cylinders move in sequence so they contact the pipe at the same time. Significant time delays between contact of the two cylinders can push the pipe off center. Timing is easily adjusted by means of two flow control valves located within the tong and two flow controls within the backup. The pipe should still be level after full clamping pressure is applied. The coupling should be centered within the tong at this time.

4. The backup clamping sequence should be identical to the tong. The centering cylinder should rise until it just contacts the pipe. It should not stop short, nor should it contact the pipe with so much force that it cause the backup suspension spring to be compressed as the backup is forced downward, or alternatively, cause light weight tubulars to be picked up. The pipe should be centered within the backup at this time. If the pipe is not level when the backup is clamped on the pipe, you will observe eccentric movement of the pipe, substantial backup movement and quite possibly very wavy torque graphs as the pipe is flexed.

4225 Highway 90, East
Broussard, Louisiana 70518
Phone: (337) 837-8847
Fax: (337) 837-8839
www.superior-manf.com

PRODUCT BULLETIN

SUBJECT: BUCKING UNIT OPERATING CONSIDERATIONS IF USING HYDRAULIC PRESSURE INTENSIFIER SYSTEMS

DATE: April 15, 2002

BULLETIN NO.: SPB02-04-15

REFERENCE: N/A

These optional air driven hydraulic pressure intensifiers boost the hydraulic clamping pressure to levels greater than can be produced using your main hydraulic power unit.

Two intensifier systems are used in the unit. Each consists of a pump and preset pressure relief valve. One system is located within the tong section and the other located within the backup section of your bucking unit. The pumps are supplied with hydraulic oil from the low pressure (upstream) side of the pilot operated check valve. High pressure is returned to the high pressure (downstream) side of the pilot operated check valve (see schematic). Both intensifiers are remotely operated by means of two 1/4 turn air control ball valves located near your bucking unit's hydraulic directional control valves. These two ball valves control the air supply to each pump.

Haskle Pump: M-71 Series 1/3 hp pumps (maximum rated output 8,800 psi) using 15 CFM @ 125 psi for maximum pressure and flow rate performance.

Swagelok Pressure Relief Valve: SS-4R3A5-G with RED spring kit 177-R3A-K1-G for 4000 to 5000 psi cracking pressure.

OPERATING PROCEDURES

1. Check all fluid levels including diesel, engine oil, hydraulic oil, compressor oil (if applicable).
2. Drain all water from air dryer. Add oil to air lubricator.
3. Install correct dies in tong and backup sections.
4. Start electric or diesel hydraulic power unit, electrical generator and air compressor (as required for your system).
5. Determine clamping pressure requirement:
   a. For low torque/large diameter tubulars use only hydraulic power unit pressure.
   b. For moderate torque/smaller diameter tubulars use only hydraulic power unit pressure plus limited intensified pressures. Limited intensified pressures are controlled by reducing air supply pressure at air regulator.

4225 Highway 90, East
Broussard, Louisiana 70518
Phone: (337) 837-8847
Fax: (337) 837-8839
www.superior-manf.com

DO NOT ATTEMPT TO ADJUST SWAGELOK PRESSURE RELIEF VALVES.
Failure to comply with this regulation may cause irreparable equipment damage and expose personnel to potentially fatal hazards.

c. For high torque/small diameter tubulars use hydraulic power unit pressure plus maximum intensified pressure. Maximum intensified pressure is achieved by adjusting regulator to maximum air pressure setting.

6. Install tubular to be bucked up in bucking unit tong and backup.

a. Actuate directional control valve to clamp backup. If intensified pressure is required, maintain directional control valve in clamped position and rotate backup intensifier air control valve to turn on air to actuate intensifier. Pump will actuate several times building pressure in clamping cylinders.

DO NOT EXTEND CYLINDERS OR ACTUATE INTENSIFIERS UNLESS PIPE CORRECT DIES ARE INSTALLED IN THE BUCKING UNIT.
Failure to comply will cause extensive equipment damage and expose personnel to dangerous high pressure hydraulic leaks.

Note: The hydraulic system pressure gauge reading will not change as it is measuring pressure on low pressure side of pilot operated check valve. Note: Pump will continue to slowly cycle if air pressure setting allows pump to intensify pressure greater than the relief valve setting.

Return air control valve to closed position. Release backup directional control valve.

b. Actuate directional control valve to clamp tong. If intensified pressure is required, maintain directional control valve in clamped position and rotate tong intensifier air control valve to actuate intensifier. The pump will actuate several times building pressure in clamping cylinders.

DO NOT EXTEND CYLINDERS OR ACTUATE INTENSIFIERS UNLESS PIPE CORRECT DIES ARE INSTALLED IN THE BUCKING UNIT.
Failure to comply will cause extensive equipment damage and expose personnel to dangerous high pressure hydraulic leaks.

Note: The hydraulic system pressure gauge reading will not change as it is measuring pressure on low pressure side of pilot operated check valve. Note: Pump will continue to slowly cycle if air pressure setting allows pump to intensify pressure greater than the relief valve setting.

Return air control valve to closed position. Release tong directional control valve.

c. Actuate tong make/break directional control valve as required.

d. Release clamping cylinders in tong and backup using directional control valves.

CONTROLS and INSTRUMENTATION

Figure 1 depicts a standard Bucking Unit Control Panel arrangement. Figure 2 is a hydraulic schematic of the bucking unit system. Part numbers for components can be found in Section 7 information. The pressure valves, shown in the schematic, have been set at the factory for proper performance and should not require adjustment under normal conditions. Situations which would dictate adjustments include handling of fiberglass tubulars or other easily collapsed thin wall materials or if steel dies slip at high torques. We recommend you contact the factory for advise before attempting to make any of these adjustments otherwise warranty coverage on the unit may be limited.

A hydraulic compression style load cell and hydraulic torque gauge are optional features on **CLINCHER®** BUCKING UNITS.

CAUTION: The electronic load cell (if supplied by Superior) has been removed for shipping and must be reattached to the right side (same side as control panel) of the Backup before operating the unit. In this position it will read torque during makeup operations only. A dummy load cell is attached to the left side of the backup. Should measurement of torque be required during breakout operations, the end user must relocate the electronic load cell and the dummy load cell to the opposite sides of the backup.

A Turns Encoder and solenoid valve have been installed on the mounting bracket (ref Gear Box Assembly Dwg. CLEBU1106 in Section 9), but not connected to Data Acquisition and Control System.

DIE INSTALLATION

Insure hydraulic power unit is turned off. Bleed system pressure by moving all control valve levers several times. Remove cap screws and clips from jaws. Insure jaw & die spline surfaces are free of debris or damage and are lightly greased. Install the required dies in the tong and backup by sliding in until they contact the fixed clip. Reinstall clips and cap screws. Tighten cap screws firmly to prevent them from vibrating loose. Do not over tighten. *Note:* The larger Bucking Units require die adapters be installed when using smaller dies. For example, when using the 11 3/4" unit with 5 1/2" casing you must install three 11 3/4" x 7 5/8" die adapters in the tong and backup before installing the 7 5/8" x 6.050" die (required for OD of API coupling) in the tong and the 5.500" die in the backup.

CAUTION: Do not operate the jaws unit without correct dies and the proper size tubular being in the tong and backup.

PRE-JOB UNIT INSPECTION

Connect all hydraulic hoses and insure suction valve is open on power unit reservoir. Energize the hydraulic power unit all it can operate for 10 minutes to warm oil. Operate each valve while monitoring for leaks.

CONTROLS and INSTRUMENTATION

PIPE INSTALLATION

Operate Tong Jaw and Backup Jaw directional control valves (DCV) as labeled on Figure 1 to insure jaws are in the fully open position. Using Tong Rotation DCV, rotate the tong to insure the bottom centering jaw is located at the lowermost point in the head by aligning the paint stripes on the tong with the matching stripes on the frame.

CAUTION: Rotational alignment is a very critical operation as the bottom jaw has controlled stroke to center the pipe in the jaws.

Refer to the hydraulic schematic (Figure 2) for more details regarding the hydraulic circuitry and components.

Manually adjust the spacing between the tong and backup to accommodate the tool joint being torqued. Using pipe handling systems or a crane, carefully install the pipe in the Bucking Unit in a level position. The tubular should be held as close to the unit centerline as is possible. For Type Two units the tubular can be lowered into the open **LOCKJAW™** Backup while feeding the end into the tong section. Close the tong jaws on the pipe using the Tong Jaw DCV. During the clamping operation you will be able to read the clamping pressure on the system pressure gage. Release Tong Jaw DCV and allow it to return to its center position. Pressures cannot be monitored when the valves are in the neutral position. Clamping pressure will be trapped within the jaw cylinders by means of pilot operated check valves. Trapping pressure by means of these check valves allows the pressure to be bled off the rotary swivel seals before rotation begins, thus extending the life of the rotary seals.

Note: This unit has been equipped with optional air driven pressure booster pumps to provide enhanced torque capacity when using non-marking aluminum dies. To operate, shift DCV to clamp position until maximum system pressure is achieved. Simultaneously open respective booster pump air control to allow cylinder pressure to build to required 4500 psi. Only a few strokes are required to achieve required pressure. Continued pumping will not over pressurize the system as a pressure relief valve is built into each pump circuit. Actual clamping pressures can be observed by a means of a gauge located on the rear, lower section of the backup or by means of an observation window at the 12 o=clock position on the rotating section.

Visually confirm proper Backup position before activating its dies. Close the backup jaws on the pipe using the Backup Jaw DCV. Release Backup Jaw DCV and allow it to return to its center position. The height of the Backup Assembly has been adjusted at the factory to position its centerline at the same elevation as the Tong Assembly=s centerline and should not require further adjustment.

CAUTION: Activating the jaws or applying torque with improperly closed jaws could result in mechanical damage or injury to personnel. Improper clamping can occur if the pipe is incorrectly positioned within the **CLINCHER®** BUCKING UNIT or if the improper combination of dies and pipe diameters are used.

CONTROLS and INSTRUMENTATION

CONSIDERATIONS WHEN APPLYING TORQUE TO TUBULARS

The application of torque to a tubular by a tong or similar devise requires a backup tong, vise or wrench to generate a reactive torque. When this reactive torque must pass through a single point, such as a load cell, an unbalanced force is created. If the tubular is sufficiently slender (its OD is small relative to its length) or if torques are high, the tubular may be seen to deflect under this bending load. To minimize the consequence of this bending it is important the backup be positioned as closely to the tong as possible.

If you are using a ***Type Two*** unit with certain types of tubulars, such as down hole tools like side pocket mandrels, it may not be possible to position the backup close to the tong. In such cases, the tubular is likely to exhibit some bending when torque is applied.

MAKEUP PROCEDURE

Insure jaws are fully extended and clamped on the pipe. Operate Tong Rotation DCV to makeup (or breakout) joint to required torque. Torque can be monitored using the optional torque gauge or the Data Acquisition System. The computer system features a dump valve which controls the maximum applied makeup torque. Note this dump valve has no effect on breakout torque. Torque can be controlled using the adjustable pressure relief valve on the power unit. Accessories are also available to dump hydraulic pressure and control rotational speed.

Attach crane to tubular (if required) after proper makeup torque has been reached. Use Tong Jaw DCV to fully retract the dies (and open the **LOCKJAW™** Backup). Carefully remove the tubular from the Bucking Unit. Using Tong Rotation DCV, rotate the tong to insure the bottom centering jaw is located at the lowermost point in the head by aligning the paint stripes on the tong with the matching stripes on the frame. The BUCKING UNIT is now ready for the next tubular operation.

BREAKOUT PROCEDURE

Load cells are to be installed on both sides of the Backup to all measurement of torque in makeup and breakout mode. Operations for breaking out of tubulars are precisely the same as for making up except for the direction of rotation controlled by Tong Rotation DCV.

CONTROLS and INSTRUMENTATION

PRODUCT BULLETIN

SUBJECT: Maintaining **CHROMEMASTER™** Bleeder Valves

DATE: January 8, 1998

BULLETIN NO.: SPB98-01-01

REFERENCE: Drawing ILL1089 (attached)

A problem was recently encountered with a **CHROMEMASTER™** which would not hold pressure. The cause of this problem was traced to an improperly maintained bleeder valve. In this case, the set screw which retains the handle loosened and allowed the handle to move until no overlap existed between the tang on the handle and the tang on the valve body. Without contact between the tangs the operator could not properly position the ball valve in the closed position.

The attached drawing and maintenance procedures have been developed to inform the users of **CLINCHER® CHROMEMASTER™** of this potential problem and means of preventing its occurrence. The position of the handle and its securing set screw should be routinely inspected. If evidence of packing leakage is observed, the packing nut should be tightened using the documented procedures. If the valve continues to leak after adjustment, it should be replaced.

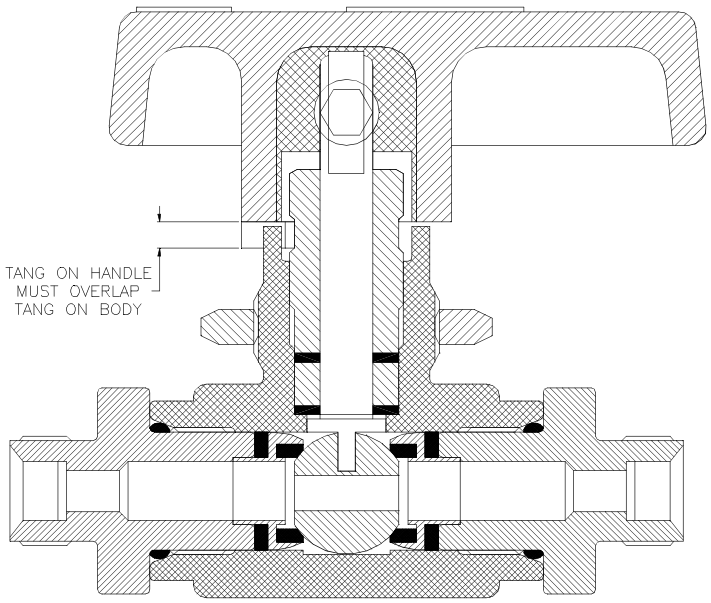

Figure 1 – General Two-Way Ball Valve Cross-Sectional Assembly
With Standard Teflon Packing

WARNING

Failure or improper selection or improper use of the products and/or systems described herein or related items can cause death, personal injury and property damage.

Maximum Allowable Working Pressure & Temperature

Valve Body Material	
Seat Material	Stainless Steel
Kel-F	6000 psi @ 70°F

Packing Adjustment

(For B-Series Ball Valves with Teflon Stem Packing)

Packing adjustments may be occasionally necessary depending on the many and varied uses for the valve. It is recommended an adjustment be made shortly after initial installation and just prior to flow startup. Always consult Superior if questions arise.

1. Remove the handle by turning the set screw counter-clockwise with a 3/32" size hex-socket wrench.
2. Tighten the packing nut 1/8 to 1/4 turn or to 70 in-lbs. using a 7/16" size hex wrench.
3. Re-install the handle and secure by turning the set screw clockwise and torque to 15 in-lbs.

Valve Connector Make-Up Instructions

CAUTION: Whenever installing or removing a ball valve from a system, always place a back-up wrench on the ball valve's end connector. NOT the valve body.

Tube Fitting Connectors

1. Insert the tube into the filter port until the tube bottoms out in the filter body. Care should be exercised to insure the tube is properly aligned with the filter body and port.
2. Normal make-up for port size 4 thru 16 (1/4 thru 1 inch) is 1-1/4 turn from finger tight.

Please follow the above directions for counting the number of turns for proper fitting make-up. Do not make-up the tube fittings by torque or "feel". Variables such as tubing and fitting tolerances, tube wall thickness, and the lubricity of nut lubricants can result in an improperly assembled tube fitting connection.

UNLESS OTHERWISE SPECIFIED TOLERANCES ARE					
2 PLACE DEC. ±.020	3 PLACE DEC. ±.010	FRACTIONS ± 1/16	ANGLES ± .5°	SURFACE 250	FLATNESS ± .015 per foot

Rev.#	Log#	Description of Revision
3		
2		
1		

1. Dimensions are in inches
2. Remove burrs & sharp edges with 1/64x45°max.
3. Machined fillet radii are 1/32
4. Normality,Squareness & parallelism of machine surfaces are .002 per inch, to a max of .012 inches for a single surface.
5. Machine diameters on a common centerline must be concentric within .005 T.I.R & unmachined diameters concentric within .032 T.I.R

1 or 1 = Revision Number

1.000 = Critical Dimension 100% Inspection Required

SHEET 1 of 1

THIS DOCUMENT IS THE PROPERTY OF SUPERIOR MANUFACTURING & HYDRAULICS AND IS CONSIDERED CONFIDENTIAL. THIS INFORMATION MAY NOT BE USED, DISCLOSED, COPIED, OR REPRODUCED IN ANY FORM, WITHOUT THE EXPRESS WRITTEN CONSENT OF SUPERIOR MANUFACTURING & HYDRAULICS.

SUPERIOR Manufacturing & Hydraulics
4225 HWY.90 E
BROUSSARD,LA 70518
(318)837-8847

PART NAME: MAINTENANCE INSRUCTIONS
CHROMEMASTER™ BLEEDER VALVE CM4556

PART #: ill1089	MATERIAL SPECIFICATION
DRAWN BY: MARK F GRAVOUIA	Matl.Req:
REVISED BY:	Initial Condition:
REF: F:\ill1000\ill1089	Stk.Size:
DATE: 1/7/98 REV.#:	H.T Instructions: Case Depth:

FIGURE 1

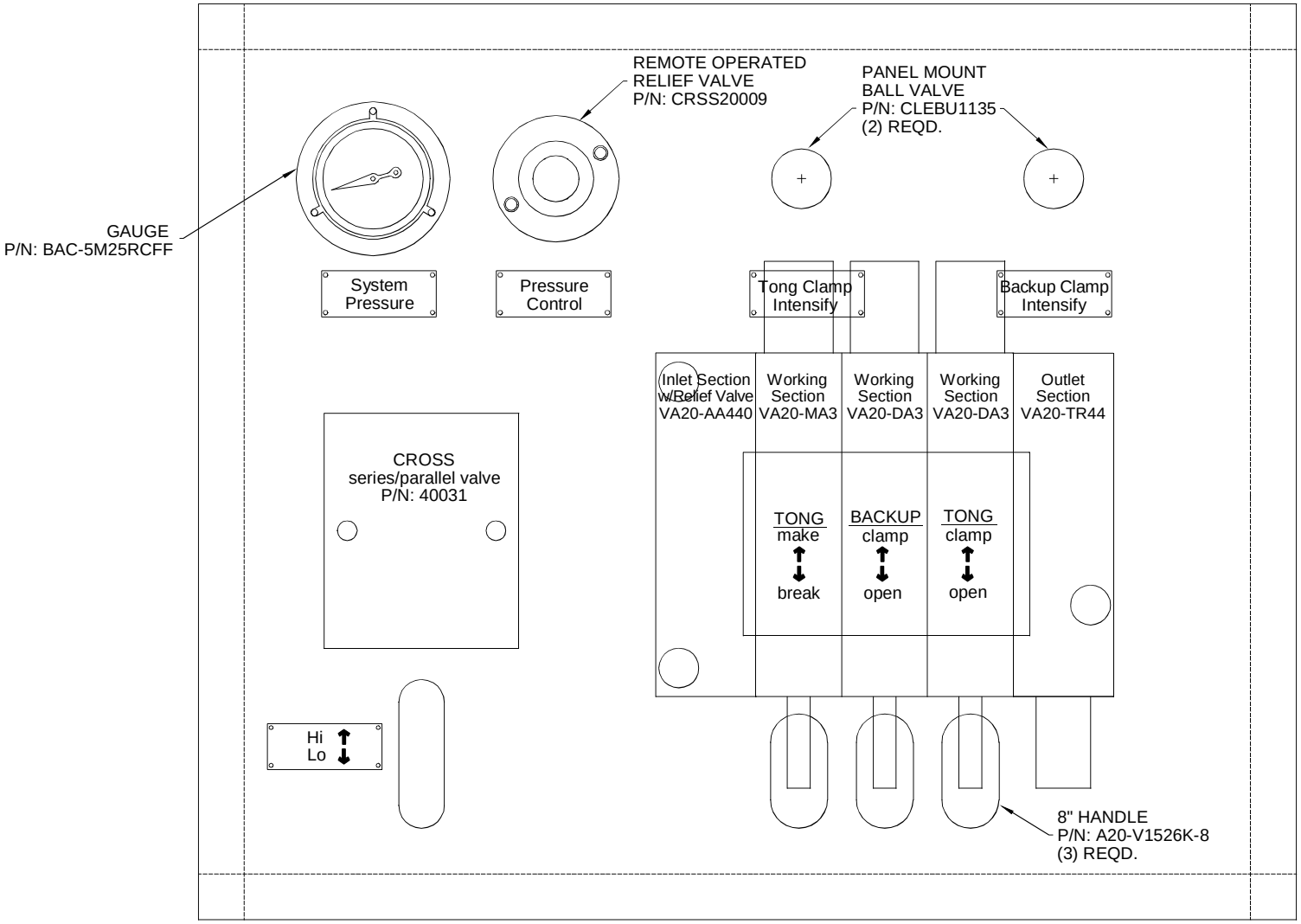

CONTROL PANEL

ASSEMBLY NO. CLEBU9682-03

SUPERIOR Manufacturing & Hydraulics
4225 HWY. 90 EAST
BROUSSARD, LA 70518
(318) 837-8847

THIS DOCUMENT IS THE PROPERTY OF SUPERIOR MANUFACTURING & HYDRAULICS AND IS CONSIDERED CONFIDENTIAL. THIS INFORMATION MAY NOT BE USED, DISCLOSED, COPIED, OR REPRODUCED IN ANY FORM, WITHOUT THE EXPRESS WRITTEN CONSENT OF SUPERIOR MANUFACTURING & HYDRAULICS.

REV. #	LOG #	DATE
		04/17/00

REF: S:\Equip Manuals-Dwgs\CLEBU1175-21\Control Panel.wpg

BILL OF MATERIALS			
Qty.	Part No.	Qty.	Description
1	BAC-5M25RCFF	2	Gauge 0-5000 psi
2	BUC5524	2	Pilot Operated Check Valve - Steel 0-5000 psi
3	CM7654	1	Pressure Reducing Valve, set @ low psi,
			w/Internal Free Flow Return Check Valve
4	CM4565	2	Check Valve 1/4-NPT 3000 psi LHACV-2P-5
5	SLV1000-01	1	Self Lubricated Valve (N.C.)
6	1650	1	Gauge 0-3000 psi
7	CLEBU1199	1	Rineer Stack Motor
8	40031	1	Hydraulic Valve SD4AADB4

BILL OF MATERIALS			
Qty.	Part No.	Qty.	Description
9	CRSS20009	1	Relief Valve, Remote, Panel Mount
10	76028	1	Unloading Valve - Rivett 8827-06-1-25
			(Modified as a Relief Valve)
11	1SD13-P4-6S	1	Sequence Valve (Cart.158G5240, Body 158B9792)
12	1800	2	Parker Flow Control Valve F600
13	CLEBU9620-01	1	Hydraulic Swivel (Swivel Outer Part)
	CLEBU9645	1	Tong Housing Weldment (Swivel Inner Part)
	CLEBU9656	4	Rotary Seal (4 pcs. = 1 set)
			OPTIONAL BILL OF MATERIALS
A	BULJ4035	2	M-36 Haskel Air Driven Pump
B	BULJ4036	2	Relief Valve SS-4R3A5 Adj. Prv.
			Set @ 3000 psi, w/177-R3A-KIE Spring
	If above options are used, change Item 6 to:		
C	BAC-5M25RCFF	1	Gauge 0-5000 psi

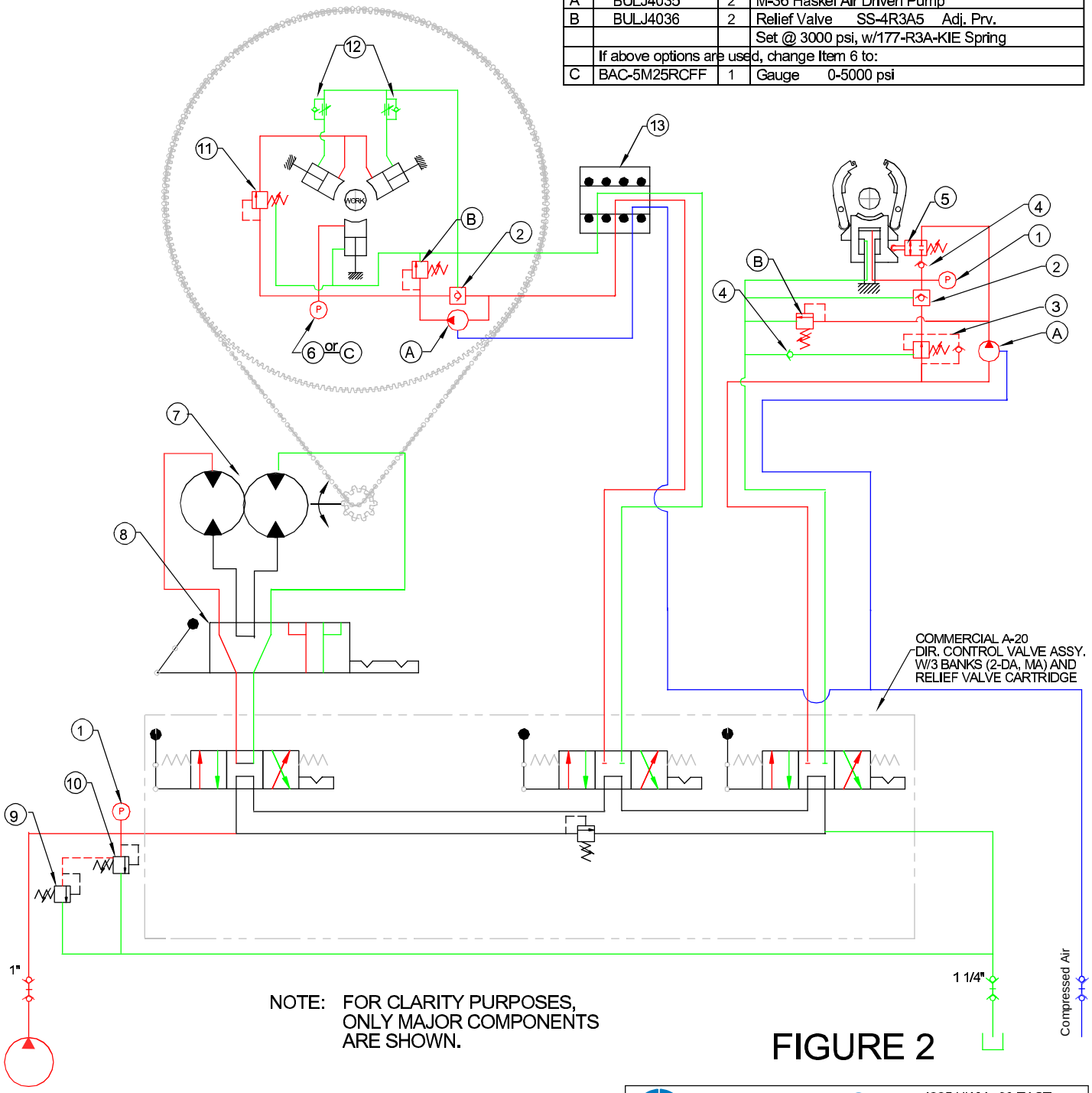

NOTE: FOR CLARITY PURPOSES, ONLY MAJOR COMPONENTS ARE SHOWN.

FIGURE 2

11 3/4" BUCKING UNIT *Type Two*

HYDRAULIC SCHEMATIC

SUPERIOR Manufacturing & Hydraulics
4225 HWY. 90 EAST
BROUSSARD, LA 70518
(318) 837-8847

THIS DOCUMENT IS THE PROPERTY OF SUPERIOR MANUFACTURING & HYDRAULICS AND IS CONSIDERED CONFIDENTIAL. THIS INFORMATION MAY NOT BE USED, DISCLOSED, COPIED, OR REPRODUCED IN ANY FORM, WITHOUT THE EXPRESS WRITTEN CONSENT OF SUPERIOR MANUFACTURING & HYDRAULICS.

REV. #	LOG #	DATE
		05/18/00

REF: S:\Equip Manuals-Dwgs\CLEBU1175-21\Hyd Sch.wpg

PRODUCT BULLETIN

SUBJECT: BUCKING UNIT CHAIN ADJUSTMENT

DATE: April 29, 2003

BULLETIN NO.: SPB03-04-29

REFERENCE: BUCKING UNIT MANUALS
ADD TO SECTION 6 / MAINTENANCE INSTRUCTIONS & TROUBLE SHOOTING

When the chains are removed from the machine and laid out, both chains should be the same length. If they are not, one has been stretched and both must be replaced.

When the chains are installed in the unit and tightened correctly, both chains on the driving side should have the same amount of tension. Note: We use a double strength chain. Half links cannot be used with this chain, use only master links when installing these chains. Do not attempt to remove all slack from both sides of the chains. Movement on the slack side of 3/8 to 3/4 inch at the middle of the slack section is acceptable.

Excessive chain tension can cause bronze bushings to become excessively worn. You can use a feeler gauge to determine the amount of clearance between the rotating hub and the ID of the bushings.

The amount of slack on the non-driven side should be the same for both chains. If this is not the case and both chains are the same length, then you may have misalignment between the centerline of the rotating tong section and the centerline of the drive shaft. Misalignment must be removed to insure uniform load distribution in both chains. Use the tension adjustment bolts to correct this condition.

When properly aligned and tensioned, chains will have an acceptable safety factor. You should avoid shock loading by gradually applying and releasing loads.

4225 Highway 90, East
Broussard, Louisiana 70518
Phone: (337) 837-8847
Fax: (337) 837-8839
www.superior-manf.com

MAINTENANCE

CLINCHER® recommends that owners of **CLINCHER®** Hydraulic Power Tongs, Backups, **CHROMEMASTER™**, Bucking Units and accessories adopt a regularly scheduled maintenance program. Implementation of this type of program offers several benefits. First, you increase the life of your equipment. Secondly, you may find a problem before it escalates to a costly repair or down time on the job, and most importantly, prevent injury to operating personnel.

A major inspection (described at the end of this section) should be carried out if equipment is suspected to have been damaged during transit or is to be mobilized to a remote location where maintenance operations are difficult to carry out.

ROUTINE MAINTENANCE

Cleaning - Upon return from each and every job, perform the following:

A) Pre-wash unit to remove majority of dirt and grease build up as to allow removal of dies, and inspection of overall condition of unit.

B) Remove and inspect dies from tong and backup. Note any missing or damaged die retainers, and or die retainer bolts.

C) Clean and inspect jaws for damage or excessive wear. Lubricate splines and all grease zerts.

D) Inspect all hoses for wear, replace as necessary.

E) Inspect backup hanger assembly to assure all parts are in operating condition.

F) Install dies of a size needed for testing purposes, and attach hydraulic power unit to Bucking Unit. Before energizing power unit make certain no one is working on Bucking Unit and all tools and parts are removed from the tong and backup assemblies.

G) Insert test mandrel of the exact same size as the dies which are installed in the tong and backup assemblies.

   Caution: Testing the function of the backup without the proper size dies installed and/or without the proper sized mandrel in place, you risk serious damage to the backup cylinder.

H) After power unit has reached operating temperature, operate the backup control valve and close backup around test mandrel using sufficient flow and pressure to clamp mandrel and maintain pressure to backup. (Recommended operating pressure of 3,000 P.S.I.) Control Panel pressure gauge should match Power Unit System operating pressure.

I) While maintaining pressure on backup visually inspect hoses, stainless steel lines, fittings, etc., for seepage of hydraulic fluid. Repair or replace parts causing leaks.

J) If at this time your backup is functioning correctly, open and close unit several times to insure consistent operation.

MAINTENANCE

K) With the proper dies installed in the tong and backup, and test mandrel locked in the backup, operate tong DCV through several cycles of locking and releasing. While maintaining pressure on Tong Assembly, visually inspect hoses, stainless steel lines, fittings, etc., for seepage of hydraulic fluid. Repair or replace parts causing leaks.

L) Operate Rotational DCV to apply torque to test mandrel up to value required for tubulars to be made up or broken out. While maintaining pressure on motor visually inspect hoses, stainless steel lines, fittings, etc., for seepage of hydraulic fluid. Repair or replace parts causing leaks.

M) **Recommended lubrication schedule performed after completion of each job.** Lubricate all externally accessible grease zerts. Note there are grease zerts for lubricating the cylinders which slide within the tong and backup assemblies which can only be accessed after removing the covers from these assemblies. Check fluid levels in hydraulic power unit reservoir, chain drive case and gear reducer.

N) Inspect hydraulic fluid for foreign material and contaminants. Filter or replace. You must filter or replace entire system including power unit tank and lines along with tong to insure all contaminants are removed.

MAINTENANCE

ANNUAL MAJOR MAINTENANCE

Inspection and Repair

Routine preventative maintenance will significantly extend the operating life of your equipment, reduce operating cost, and avoid downtime. **CLINCHER®** recommends a program of frequent routine inspection and if equipment is suspected to have been damaged during transit or is to be mobilized to a remote location where maintenance operations are difficult to carry out, perform the following:

A) Visually inspect components on Bucking Unit and Power Unit, which could possibly have been damaged either during operation or transit.

B) Check test date. Ensure that a load test and inspection was carried out within the last 9 months.

C) Check sprockets and chain for any signs of damage or wear.

D) Remove motor and valve assembly from the Bucking Unit.

E) Check motor seal. Apply hydraulic power, run the motor and visually check the motor seal for any signs of leakage.

F) Check gear reducer per manufacturers specifications.

G) Remove covers from Tong and Backup Assemblies. Inspect hydraulic hoses and components for leaks. Lubricate internal grease zerts.

H) Check condition of control valve spools. Activate valves and check for any sign of wear, pitting or scoring of the chrome surface of the spools. If the spool is damaged in any way, the complete section must be changed out as spools are not interchangeable.

I) Remove covers and inspect chain and sprockets for wear or excess slack.

J) Check condition of all hydraulic hoses and fittings. Visually inspect all hydraulic hoses fitted to the tong and in the backup for any signs of leaks, cuts, or wear.

K) Reinstall all parts which were removed for inspection and/or damage. Connect to hydraulic power supply and function test operation. Torque test utilizing appropriate dies and test mandrel.

L) Sample power unit fluid and have processed for contaminants. Replace return filter according to manufacturer=s specifications.

M) Lubricate tong and backup according to maintenance schedule preceding this section.

N) Paint, remembering to mask off surfaces not intending to paint with grease or masking tape.

O) Complete dated inspection report giving details of all duties performed along with complete list of items replaced.

TROUBLE SHOOTING

HYDRAULIC SYSTEM

Hydraulic Pump Making Excessive Noise:

	Problem	Solution
A)	Restricted or clogged intake line	Clean line, check for contamination.
B)	Contaminated fluid	Flush system change fluid.
C)	Restricted vent	Clean or replace air vent.
D)	Air in fluid	Check for leaks and be certain fluid suction in tank is well below hydraulic fluid in reservoir.
E)	Damaged or worn parts	Repair or replace damaged parts, check fluid for contamination.
F)	Excessive RPM (I/C engines only)	Check PTO, gears and recommended speed to assure proper pump is installed for operation.
G)	Increased friction	Make sure pump has been assembled using correct torque valves.
H)	Damaged or worn relief valve	Replace relief valve.
I)	Damaged or worn check valve	Replace check valve.
J)	Restricted discharge	Check to make sure relief valve is set to proper pressure.
K)	Valve system restricted	Inspect and repair or replace defective parts, check system for contamination.

TROUBLE SHOOTING

HYDRAULIC SYSTEM

Excessive Wear to Hydraulic Components:

	Problem	Solution
A)	Fluid contamination	Flush fluid system, replace with new fluid.
B)	Components misaligned	Inspect and realign.
C)	High operating pressures	Gauge and set to proper pressure.
D)	Exhausted fluid (depletion of additives)	Flush fluid system, replace with new fluid.
E)	Air in fluid	Check for leaks, and be certain fluid suction in tank is well below hydraulic fluid in reservoir.

HYDRAULIC TONG SECTION

	Problem	Solution
A)	Shortened bearing life	Check alignment, insure proper lubrication to non-sealed bearings.

Slow Tong Speed:

	Problem	Solution
A)	Restricted supply line	Clear supply line and check intake on reservoir.
B)	Low fluid level	Add fluid to proper volume.
C)	Air leak	Locate and repair leak.
D)	Pump speed insufficient	Assure proper pump speed for application.
E)	Damaged or worn equipment	Isolate pump and check pressure to determine whether motor or pump is defective. Repair or replace defective part.

TROUBLE SHOOTING

Slow Tong Speed:

	Problem	Solution
F)	Pump not primed	Check fluid viscosity and restrictions of intake line. Replace fluid if inadequate for operating temperature.
G)	Low or no flow from supply line	Check to assure couplings are securely fastened.
H)	Hydraulic bypass valve malfunction	Inspect. Adjust unloading pressure. Replace or repair as necessary.

Insufficient Torque:

	Problem	Solution
A)	Relief valve malfunctioning	Relief set too low, broken valve spring, contamination or defective seals.
B)	Damaged or worn pump parts	Inspect, repair or replace.
C)	Slow pump speed	Assure proper pump speed for application.
D)	Improper system fluid	Check fluid viscosity and replace fluid if inadequate for operating temperature.
E)	Directional control valve set improperly	Check relief and directional control valve. Neutral should return slightly to reservoir.
F)	Damage to motor	Inspect, repair or replace.
G)	Restriction of supply line, excessive back pressure	Check to assure couplings are securely fastened.
H)	Defective gauge or load cell	Inspect, repair or replace. Assure unit has been calibrated to proper arm length. NOTE: When using **CLINCHER®** integral backup system, it is the length of backup arm, NOT the tong arm length.

TROUBLE SHOOTING

Failure to Grip Tubulars:

	Problem	Solution
A)	Jaws move out from neutral, but fail to penetrate	Inspect die size and replace with correct dies for pipe. Wrong size dies for tubular.
B)	Jaws fail to move out of neutral	Inspect and replace defective cylinders for debris or damage. Remove rust and debris from jaws, and jaw pockets. Repair, replace and lubricate as needed.
C)	Tong will not release from tubular	Inspect Directional Control Valves.
D)	Motor runs but Tong does not rotate	Inspect and replace defective chain, sprocket or gear reducer.
E)	Tong binds under light load	Inspect and replace defective parts. Damaged hub or bearings.
F)	Tong rotates while control lever is in neutral	Replace control valve.
G)	Hydraulic fluid leaking from motor	Replace motor shaft seal.

TROUBLE SHOOTING

HYDRAULIC BACKUP SYSTEM

Backup Fails to Hold Tubular:

	Problem	Solution
A)	Incorrect die for size tubular	Check pipe O.D. and match die size to pipe O.D.
B)	Dies have material compacted in tooth area	Clean dies with wire brush and inspect for worn teeth. Replace with new dies if necessary.
C)	Power unit pressure set incorrectly	Inspect relief valve on power unit to make sure enough system pressure is being delivered to backup.
D)	Counter balance valve not holding pressure	Remove side plates on backup. Bench test and replace the counter balance valve defective.
E)	Internal leakage in backup cylinder	Disconnect lines and bench test cylinder. Repair or replace as necessary.
F)	Jaws will not retract	Counter balance valve is stuck. Replace counter balance valve.
G)	External leakage of cylinder	Repair or replace cylinder.
H)	Control valve set to neutral, but jaws extend	Inspect control valve for damage and/or incorrect spool. Repair or replace as necessary.

SECTION 7 CLEBU1175-21 11 3/4" BUCKING UNIT PARTS LISTS

TABLE OF CONTENTS

BUCS11800 / 11 3/4" BUCKING UNIT BACKUP ..... 7 - 3
CLEBU1101 / 11 3/4" TYPE 2 FRAME WELDMENT ..... 7 - 5
CLEBU1106 / GEAR BOX ASSEMBLY ..... 7 - 6
CLEBU1123 / CYLINDER ASSEMBLY *(FOR TONG - 2 REQD.)* ..... 7 - 7
CLEBU1123-C / CENTER CYLINDER ASSEMBLY *(FOR TONG)* ..... 7 - 7
CLEBU7619 / TONG COVER ASSEMBLY ..... 7 - 8
CLEBU9626 / TONG & ROTARY ASSEMBLY ..... 7 - 8
CLEBU9636-03 / CARRIAGE ASSEMBLY *(2 REQD.)* ..... 7 - 9
CLEBU9682-03 / CONTROL CONSOLE ASSEMBLY ..... 7 - 10

SECTION 7 CLEBU1175-21 11 3/4" BUCKING UNIT PARTS LISTS

BUCS11800 / 11 3/4" LOCKJAW™ BACKUP

Part No.	*Qty.*	*Description*
1001	8	Zert, NPT - 1/8"
1040-A	12	SHCS - 3/8"-16 x 3/4"
1154	8	SHCS - 5/8"-11 x 1 3/4"
1171	38	Lockwasher - 3/4" Gr8
1171-A	36	SHCS - 3/4"-10 x 1 1/4"
1173	32	HHCS - 3/4"-10 x 1 3/4"
1176-A	6	Nut, Coarse - 3/4" Gr8
1184-A	6	HHCS - 3/4"-10 x 8 1/2" Gr8
18702625	1	Polypack 3/16" Cross Section - 2 5/8" x 3" x 3/16"
25004500	1	Polypack 1/4" Cross Section - 4 1/2" x 5" x 1/4"
25005500	1	Polypack 1/4" Cross Section - 5 1/2" x 6" x 1/4"
37505250	2	Polypack 3/8" Cross Section - 5 1/4" x 6" x 3/8"
959-41	1	Wiper, Rod - 4 1/2"
BAC-5M25RCFF	1	Gauge
BUC5524	1	Valve, Check Pilot Operated - Steel (5000 psi)
BUCS11004	2	Insert - f/11 3/4" LJ Backup
BUCS11012	2	Door Plate, Outside - BUCS11800
BUCS11013	2	Door Plate, Inside - BUCS1175-01
BUCS11014	2	Door Roller - BUCS11800
BUCS11017	10	Spacer - BUCS11800
BUCS11019	2	Spring Spacer
BUCS11801	1	Piston - BUCS11800
BUCS11802	1	Gland - BUCS11800
BUCS11803	1	Rod - BUCS11800
BUCS11804	1	Plate, Backing
BUCS11805	4	Cylinder Guide - BUCS11800
BUCS11806	1	Door Wedge, Inside - BUCS11800
BUCS11807	1	Door Wedge, Outside - BUCS11800
BUCS11808	1	Jaw, Rear
BUCS11809	2	Plate, Backup
BUCS11811	2	Load Cell Bracket - Assembly
BUCS11812	10	Follower

SECTION 7 CLEBU1175-21 11 3/4" BUCKING UNIT PARTS LISTS

BUCS11800 / 11 3/4" LOCKJAW™ BACKUP

Part No.	*Qty.*	*Description*
BUCS11813	1	Plate, Housing Rear
BUCS11814	1	Plate, Housing Front
BUCS11815	6	Spacer, Housing
BUCS11816	2	Load Cell Brace
BUCS11817	2	Spacer
BUCS11822	2	Load Cell Cover Plate
BUCS2145	2	Pin, Pivot
BUCST1518	4	Bushing, Garlock - 32DU24
BUCST7615	4	Spacer, Pivot Pin - Lockjaw Backup Tension Style
BUCST7617	2	Door Roller Pin - Lockjaw Backup Tension Style
CLE18527	1	Spring, Torsion - Left Hand - CLE185 - 3/8" W x 2 1/2" ID x 5 Coils
CLE18528	1	Spring, Torsion - Right Hand - CLE185 - 3/8" W x 2 1/2" ID x 5 Coils
CLEBU1121	6	Clip, Die Adaptor Retainer
CM4565	2	Valve, Check - 1/4 NPT - LHA - CV02P5
CM7654	1	Valve, Pressure Reducing - Sun YPDA-KAN-BB
SLV1000-01	1	Valve, Self Lubricated (N.C.) - Assembly
W47500625	1	Wear Band

SECTION 7 CLEBU1175-21 11 3/4" BUCKING UNIT PARTS LISTS

CLEBU1101 / 11 3/4" TYPE 2 FRAME WELDMENT

Part No.	*Qty.*	*Description*
CLEBU1101-S1	2	Weldment #01
CLEBU1101-S2	1	Weldment #02
CLEBU1101-S3	1	Weldment #03
CLEBU1101-S4	2	Weldment #04
CLEBU1101-S5	2	Weldment #05
CLEBU1101-S6	1	Weldment #06
CLEBU1101-S7	4	Weldment #07
CLEBU1101-S8	4	Weldment #08
CLEBU1101-S9	8	Weldment #09
CLEBU1101S10	1	Weldment #10
CLEBU1101S11	2	Weldment #11
CLEBU1101S12	2	Weldment #12
CLEBU1101S13	2	Weldment #13
CLEBU1101S14	1	Weldment #14
CLEBU1101S15	2	Weldment #15
CLEBU1101S16	2	Weldment #16
CLEBU1101S17	4	Weldment #17
CLEBU1101S18	2	Splash Guard, Front/Rear
CLEBU1101S19	1	Weldment, Gear Box Adjustment
CLEBU1101S20	3	Weldment #20
CLEBU1101S21	1	Weldment #21, Frame - CLEBU1175-21
CLEBU1101S22	2	Weldment #22 - CLEBU1175-21
CLEBU1101S23	2	Weldment #23 - CLEBU1175-21
CLEBU1101S25	1	Weldment #25
CLEBU1101S26	1	Weldment #26
CLEBU1101S27	1	Weldment #27
CLEBU1101S28	4	Lifting Lugs - CLEBU1175-21
CLEBU1601S18	4	Weldment #18
CLEBU9638-S2	1	Plate, Base
CLEBU9685	4	Weldment, Bolt Down Foot 1"

SECTION 7 CLEBU1175-21 11 3/4" BUCKING UNIT PARTS LISTS

CLEBU1106 / GEAR BOX ASSEMBLY

Part No.	*Qty.*	*Description*
1170-A	4	Lockwasher - 3/4" Hi Collar
1171	6	Lockwasher - 3/4" Gr8
1173	6	HHCS - 3/4"-10 x 1 3/4"
1173-A	4	SHCS - 3/4"-10 x 3 1/4"
1499-A	1	Sight Glass - 3/4"-10 1U924
1970	1	Bearing, SCF-30 - Flange
CLEBU1107	1	Gear Reducer - SOM #PG1001MS/5.6/D13
CLEBU1108	1	Weldment, Gear Box Housing - CLEBU1175-03/CLEBU1175-21
CLEBU1109	1	Weldment, Drive Shaft - CLEBU1175-21
CLEBU1110	1	Gear Box Adaptor w/ SOM Gear Box - CLEBU1175-21
CLEBU1195	1	Gear Box Pilot Adaptor - CLEBU1175-02/CLEBU1175-21
CLEBU1199	1	Motor, Rineer Stack 037A4-PC-32-31
CLEBU9612	1	Weldment, Access Cover - CLEBU1175-21

SECTION 7 CLEBU1175-21 11 3/4" BUCKING UNIT PARTS LISTS

CLEBU1123 / CYLINDER ASSEMBLY *(FOR TONG - 2 REQD.)*

Part No.	*Qty.*	*Description*
1153	4	SHCS - 5/8"-11 x 1"
153	4	HHCS - 7/16"-14 x 3/4" Gr8
25004500	1	Polypack 1/4" Cross Section - 4 1/2" x 5" x 1/4"
25005000	1	Polypack 1/4" Cross Section - 5" x 5 1/2" x 1/4"
37504750	1	Polypack 3/8" Cross Section - 4 3/4" x 5 1/2" x 3/8"
959-41	1	Wiper, Rod - 4 1/2"
BUC5528	1	Gland for Jaw
CLEBU1121	2	Clip, Die Adaptor Retainer
CLEBU1126	1	Rod - CLEBU1175-21
CLEBU1131	1	Cylinder Housing - Mat 4140 Plate - CLEBU1175-21
CLEBU9624	1	Pin, Dowell - Bucking Unit Rod - CLEBU1175-21
W47500625	1	Wear Band
W55000500	1	Wear Band, Nylon - 5 1/2" OD

CLEBU1123-C / CENTER CYLINDER ASSEMBLY *(FOR TONG)*

Part No.	*Qty.*	*Description*
1153	4	SHCS - 5/8"-11 x 1"
153	4	HHCS - 7/16"-14 x 3/4" Gr8
25004500	1	Polypack 1/4" Cross Section - 4 1/2" x 5" x 1/4"
25005000	1	Polypack 1/4" Cross Section - 5" x 5 1/2" x 1/4"
37504750	1	Polypack 3/8" Cross Section - 4 3/4" x 5 1/2" x 3/8"
959-41	1	Wiper, Rod - 4 1/2"
BUC5528	1	Gland for Jaw
CLEBU1121	2	Clip, Die Adaptor Retainer
CLEBU1126	1	Rod - CLEBU1175-21
CLEBU1131	1	Cylinder Housing - Mat 4140 Plate - CLEBU1175-21
CLEBU9618	1	Cylinder, Spacer - Center - CLEBU1175-21
CLEBU9624	1	Pin, Dowell - Bucking Unit Rod - CLEBU1175-21
W47500625	1	Wear Band
W55000500	1	Wear Band, Nylon - 5 1/2" OD

SECTION 7 CLEBU1175-21 11 3/4" BUCKING UNIT PARTS LISTS

CLEBU7619 / TONG COVER ASSEMBLY

Part No.	*Qty.*	*Description*
1027	6	Lockwasher - 3/8" (134)
1047	6	HHCS - 3/8"-16 x 1" Gr8
1150-A	3	Nut, Brass - 6/32"
1150-C	3	Bolt, Brass - 6/32" x 1 1/2" OAL
CLEBU1692	1	Sight Cover, Tong
CLEBU1693	1	Sight Glass, Tong - 3 1/2" OD Plexi Glass
CLEBU7620	1	Weldment, Tong Cover - Type 2 Bucking Units
CLEBU7621	2	Cover Mount - Type 2 Bucking Units

CLEBU9626 / TONG & ROTARY ASSEMBLY

Part No.	*Qty.*	*Description*
1001	8	Zert, NPT - 1/8"
1089	2	Screw, Set - 1/2" X 1/2"
1150-A	3	Nut, Brass - 6/32"
1150-B	3	Bolt, Brass - 6/32" x 3/4"
1171	8	Lockwasher - 3/4" Gr8
1172	2	SHCS - 3/4"-10 x 4 3/4"
1176	6	HHCS - 3/4"-10 x 3" Gr8
1606	2	Plug, Flush - 1/4"
1650	1	Gauge - 0-3000 Lenz BAC3M-25
1800	2	Valve, Flow Control - Parker F600
1SD13-P4-6S	1	Valve, Sequence - 1/2" Port (Cart. 158G5240, Body 158B9792)
BUC5524	1	Valve, Check Pilot Operated - Steel (5000 psi)
CLEBU1104	1	Bearing Race, Front - CLEBU1175-21
CLEBU1150	1	Weldment, Splash Guard - Type 2 Bucking Units
CLEBU7622	1	Swivel, Keeper
CLEBU7622-S1	1	Swivel, Keeper Mounting Pad
CLEBU9601-S1	4	Bearing Housing Mount - CLEBU1175-21
CLEBU9603	2	Bearing Housing - CLEBU1175-21
CLEBU9604	1	Bearing Race - CLEBU1175-21
CLEBU9620-01	1	Swivel, Hydraulic - CLEBU1175-21
CLEBU9645	1	Weldment, Tong Housing - CLEBU1175-21
CLEBU9656	4	Seal, Rotary - Set TGR414000-T29FA
CLEBU9665	2	Chain, #80 HS - 21000 lbs. x 10'
CLEBU9666	4	Link, Connecting - #80 HS Chain
CLEBU9667	4	Link, Half - #80 HS Chain

SECTION 7 CLEBU1175-21 11 3/4" BUCKING UNIT PARTS LISTS

CLEBU9636-03 / CARRIAGE ASSEMBLY *(2 REQD.)*

Part No.	*Qty.*	*Description*
1001	4	Zert, NPT - 1/8"
1171	4	Lockwasher - 3/4" Gr8
1173	4	HHCS - 3/4"-10 x 1 3/4"
1210	4	Nut - 1"-8 Gr8
1213	4	Nut, Nylock - 1"-12 - Low Profile
1218	10	Lockwasher - 1" Gr8
1910	8	Bearing, SKF 1206
1929	4	Ring, Snap - Int. RR-244
276	6	Nut, Hex - 1"-14
55024-A	4	Washer, Thrust
76025-A	2	Shaft, Dumbell - New Style
BUC4515	2	Leg Spring - 4" OD x 7 1/2" Lg, 3/8" wire 119 lbs/in, 7 turns, sqd & grnd ends
BUCS11818	1	Weldment, Carriage - Bucking Units w/LJ BUCS
BUCS11819	2	Tube, Stop
BUCS11821	1	Spring Retainer Plate - Assembly
BUCS11823	2	Spring Adjustment Bolt
BUCS11824	2	Spring Retainer - Top
BUCS11827	6	Cam Follower, Modified McGill
BUCS11830	2	All Thread - 1"-8 x 9" - f/Bucking Unit
CLEBU7610	2	Load Cell Carriage Roller w/ 4 x 6 Beam

SECTION 7 CLEBU1175-21 11 3/4" BUCKING UNIT PARTS LISTS

CLEBU9682-03 / CONTROL CONSOLE ASSEMBLY

Part No.	*Qty.*	*Description*
1027	5	Lockwasher - 3/8" (134)
1060	2	HHCS - 3/8"-16 x 2 1/2" Gr8
1072	3	HHCS - 3/8"-16 x 3 3/4" Gr8
1150-A	3	Nut, Brass - 6/32"
1150-B	3	Bolt, Brass - 6/32" x 3/4"
40031	1	Valve, Hydraulic - SD4AADB4 129233
76028	1	Valve, Unloading - Rivett 8827-06-1-25
A20-V1526K-8	3	Handle, A/20 8" - 341 9100 002
BAC-5M25RCFF	1	Gauge
CLEBU1135	2	Valve, Ball - Panel Mt. On-Off - Val. 44A, 45A-44F6
CLEBU9680-03	1	Weldment, Control Console - CLEBU1175-21
CLEBU9681-03	1	Label Sets, Console - CLEBU1175-21
CRSS20009	1	Valve, Relief - Remote, Panel Mount - Dynex #8820-01-1/4-21
VA20-AA440	1	Valve, Inlet w/Relief
VA20-DA3	2	Valve, Work Section
VA20-MA3	1	Valve, Work Section
VA20-TR44	1	Valve, Outlet Section

OPTIONS and ACCESSORIES

OPTIONAL Features and Equipment - In addition to the basic differences between the ***Type One*** and ***Type Two*** units, several customer specified options are available for both units including:

Maximum diametrical gripping capacity
Maximum backup travel distance (***Type One*** Units)
Maximum length capacity (***Type Two*** Units)
Maximum torque rating
Maximum rotational speed and optional two speed motors
Types of power units
Elevation control systems
Hydraulic load cell and torque gauge
Electronic data acquisition/control systems
Hydraulic load control
Hydraulic speed control
Remotely actuated control valve system
Pipe handling systems
Removable, swiveling control panel

SECTION 9 CLEBU1175-21 11 3/4" BUCKING UNIT ILLUSTRATIONS

TABLE OF CONTENTS

GEAR BOX ASSEMBLY *(Assy. No. CLEBU1106)* ..... 9 - 3
TONG ASSEMBLY *(Assy. No. CLEBU9626)* ..... 9 - 4
BACKUP ASSEMBLY *(Assy. No. BUCS11800)* ..... 9 - 5
INSIDE DOOR ASSEMBLY ..... 9 - 6
OUTSIDE DOOR ASSEMBLY ..... 9 - 7
HOUSING ASSEMBLY ..... 9 - 8
BACKUP AND HOUSING ASSEMBLY ..... 9 - 9
BACKUP CYLINDER ASSEMBLY ..... 9 - 10
CARRIAGE ASSEMBLY *(Assy. No. CLEBU9636-03)* ..... 9 - 11
DIE ADAPTOR VARIATION *(Part No. CLEBU1123)* ..... 9 - 12

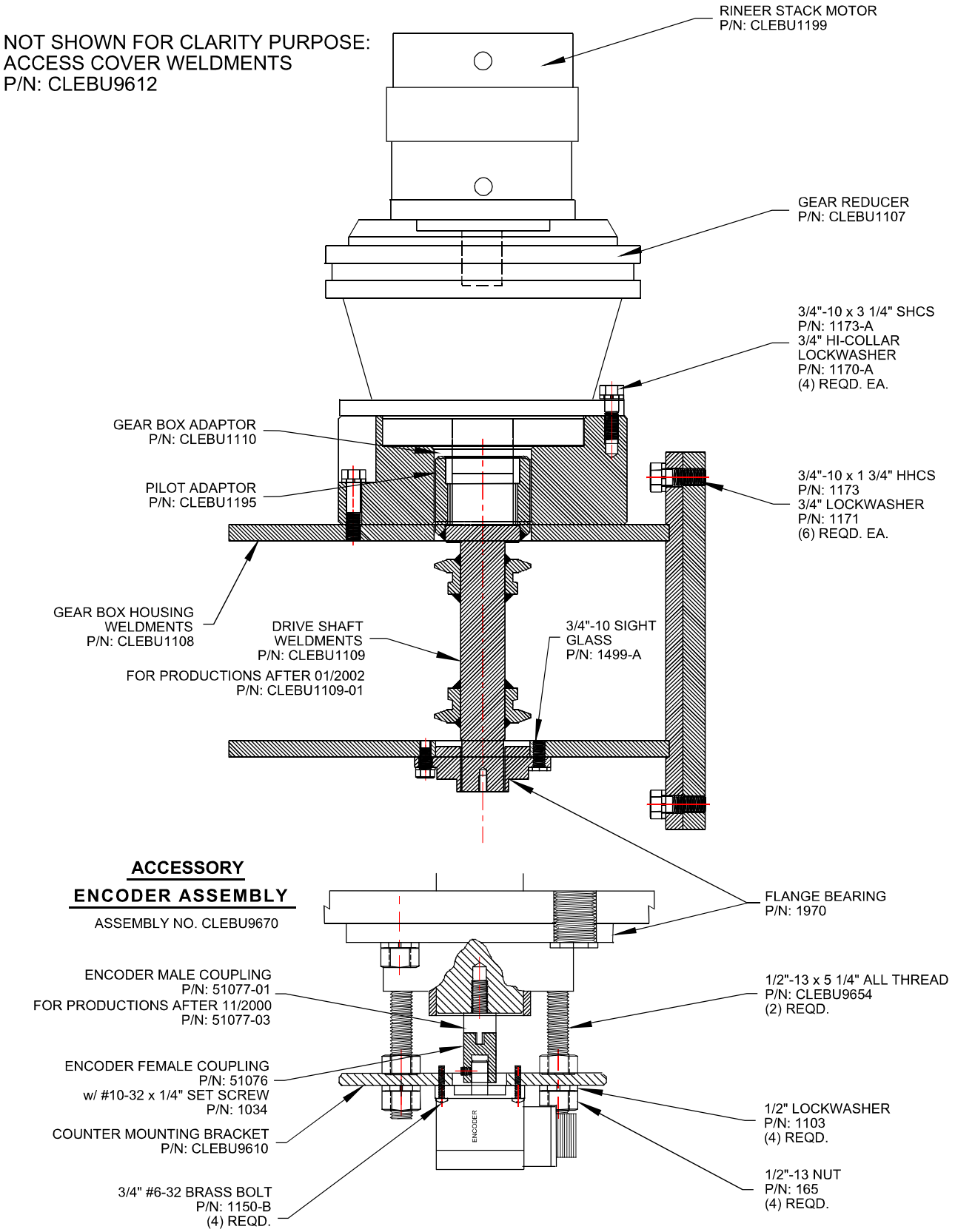

GEAR BOX ASSEMBLY

ASSEMBLY NUMBER: CLEBU1106

SUPERIOR Manufacturing & Hydraulics
4225 HWY. 90 EAST
BROUSSARD, LA 70518
(318) 837-8847

THIS DOCUMENT IS THE PROPERTY OF SUPERIOR MANUFACTURING & HYDRAULICS AND IS CONSIDERED CONFIDENTIAL. THIS INFORMATION MAY NOT BE USED, DISCLOSED, COPIED, OR REPRODUCED IN ANY FORM, WITHOUT THE EXPRESS WRITTEN CONSENT OF SUPERIOR MANUFACTURING & HYDRAULICS.

REV. #	LOG #	DATE
1		04/15/02

REF: S:\Equip Manuals-Dwgs\CLEBU1175-21\Gear Box rev1.wpg

CYLINDER ASSEMBLY CHART		
MODEL	CYLINDER ASSEMBLY	CENTER CYLINDER ASSEMBLY
CLEBU9625	CLEBU9623	CLEBU9623-C
CLEBU1075	CLEBU1023	CLEBU1023-C
CLEBU1175	CLEBU1123	CLEBU1123-C

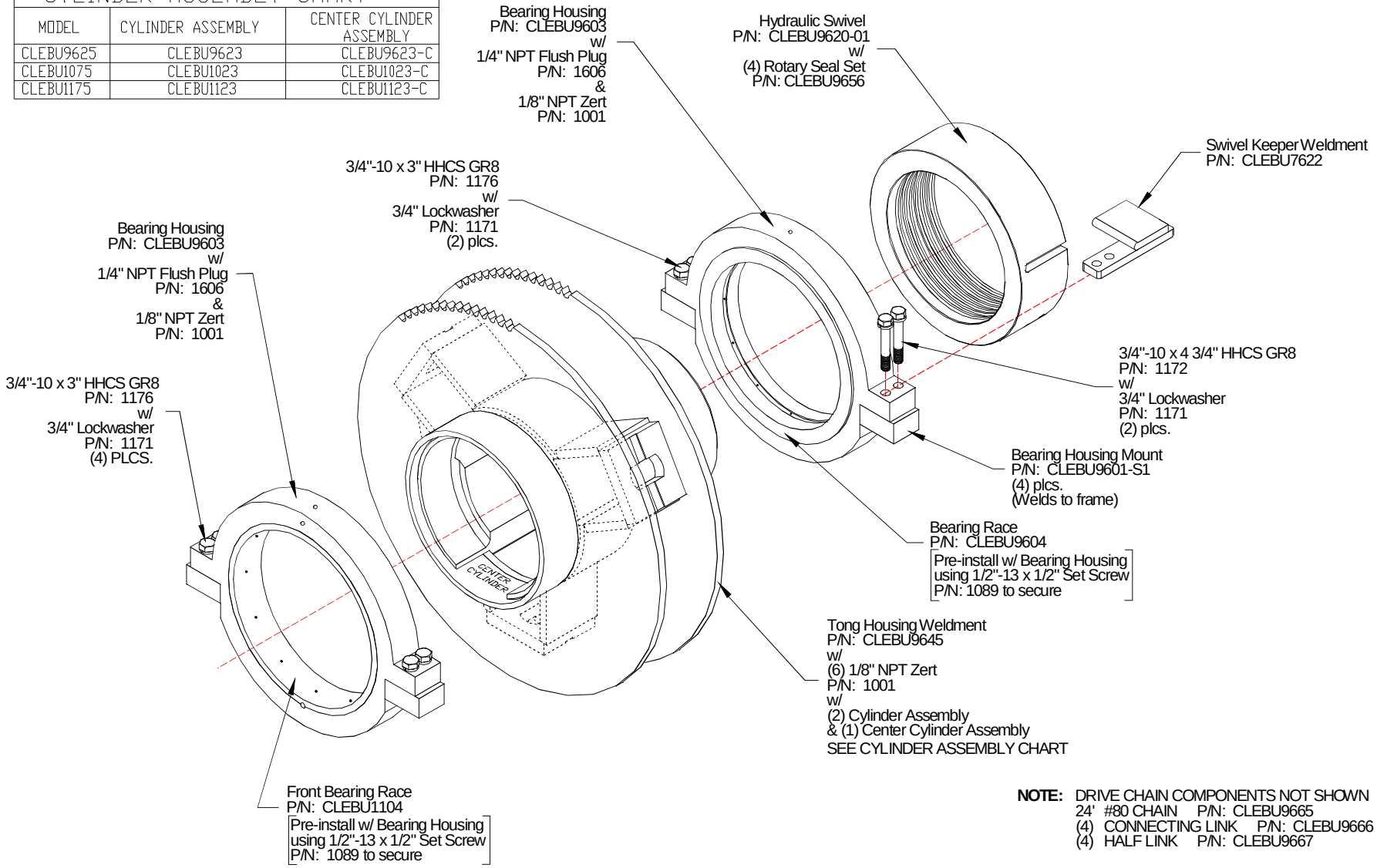

NOTE: DRIVE CHAIN COMPONENTS NOT SHOWN
24' #80 CHAIN P/N: CLEBU9665
(4) CONNECTING LINK P/N: CLEBU9666
(4) HALF LINK P/N: CLEBU9667

TONG ASSEMBLY

ASSEMBLY NUMBER CLEBU9626

SUPERIOR Manufacturing & Hydraulics
4225 HWY. 90 EAST
BROUSSARD, LA 70518
(318) 837-8847

THIS DOCUMENT IS THE PROPERTY OF SUPERIOR MANUFACTURING & HYDRAULICS AND IS CONSIDERED CONFIDENTIAL. THIS INFORMATION MAY NOT BE USED, DISCLOSED, COPIED, OR REPRODUCED IN ANY FORM, WITHOUT THE EXPRESS WRITTEN CONSENT OF SUPERIOR MANUFACTURING & HYDRAULICS.

REV. #	LOG #	DATE
1	99-10-066	10/20/99

REF: S:\Equip Manuals-Dwgs\CLEBU1175-21\Tong Assy rev1.wpg

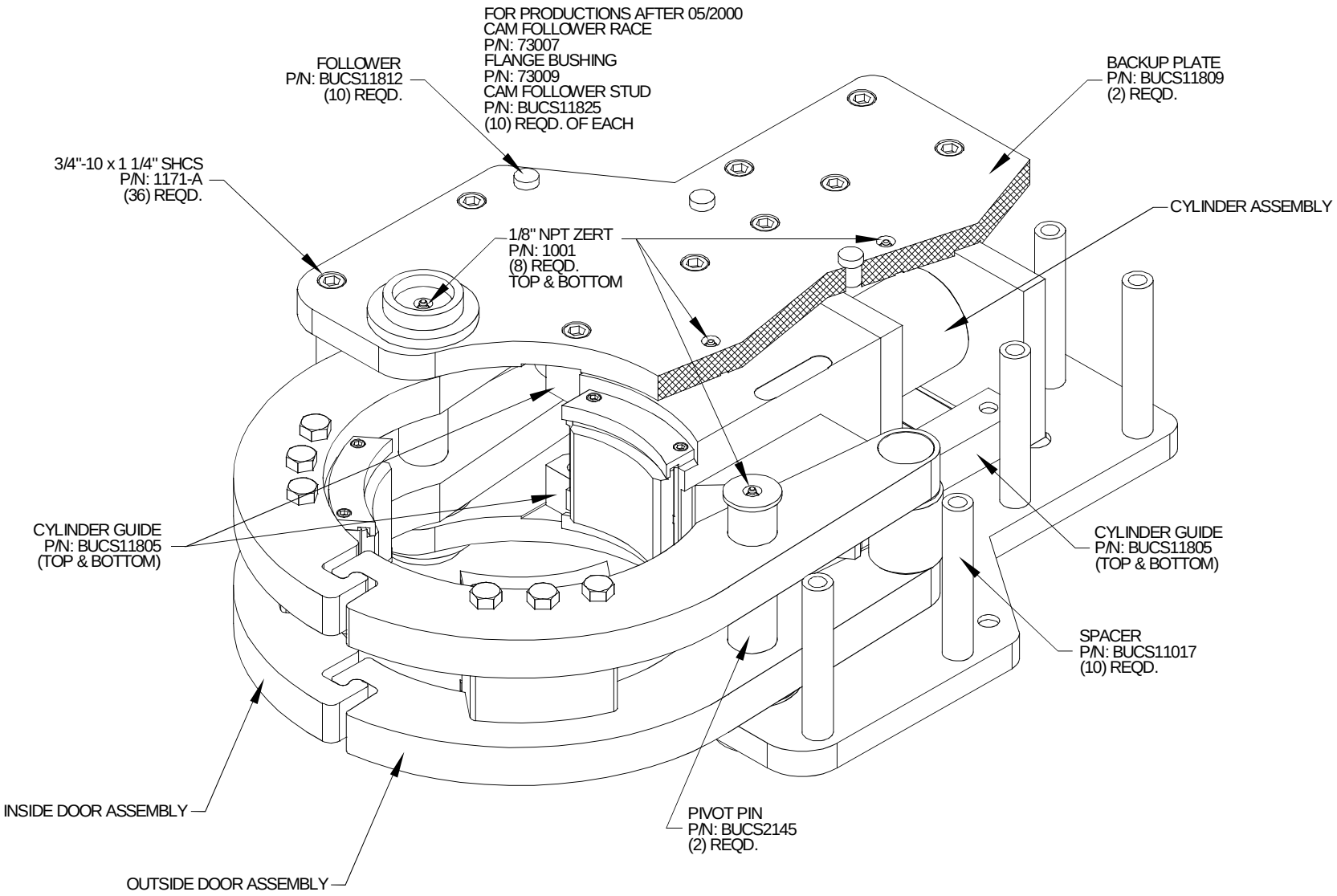

BACKUP ASSEMBLY

ASSEMBLY NUMBER BUCS11800

SUPERIOR Manufacturing & Hydraulics
4225 HWY. 90 EAST
BROUSSARD, LA 70518
(318) 837-8847

THIS DOCUMENT IS THE PROPERTY OF SUPERIOR MANUFACTURING & HYDRAULICS AND IS CONSIDERED CONFIDENTIAL. THIS INFORMATION MAY NOT BE USED, DISCLOSED, COPIED, OR REPRODUCED IN ANY FORM, WITHOUT THE EXPRESS WRITTEN CONSENT OF SUPERIOR MANUFACTURING & HYDRAULICS.

REV. #	LOG #	DATE
1		06/26/01

REF: S:\Equip Manuals-Dwgs\CLEBU1175-21\Backup Assy rev1.wpg

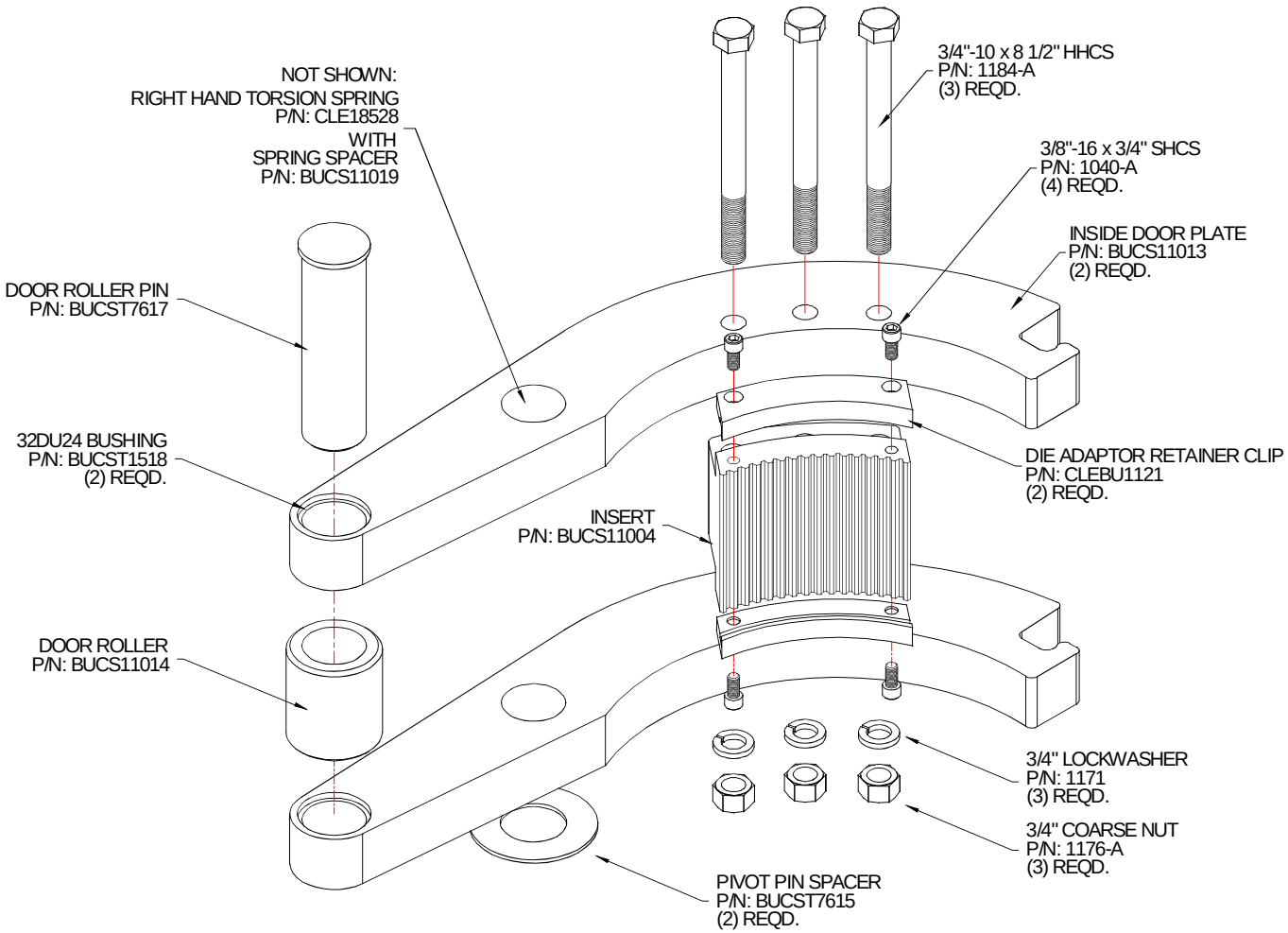

BACKUP INSIDE RIGHT DOOR ASSEMBLY

SUPERIOR Manufacturing & Hydraulics
4225 HWY. 90 EAST
BROUSSARD, LA 70518
(318) 837-8847

THIS DOCUMENT IS THE PROPERTY OF SUPERIOR MANUFACTURING & HYDRAULICS AND IS CONSIDERED CONFIDENTIAL. THIS INFORMATION MAY NOT BE USED, DISCLOSED, COPIED, OR REPRODUCED IN ANY FORM, WITHOUT THE EXPRESS WRITTEN CONSENT OF SUPERIOR MANUFACTURING & HYDRAULICS.

REV. #	LOG #	DATE
1		06/26/01

REF: S:\Equip Manuals-Dwgs\CLEBU1175-21\Door Inside rev1.wpg

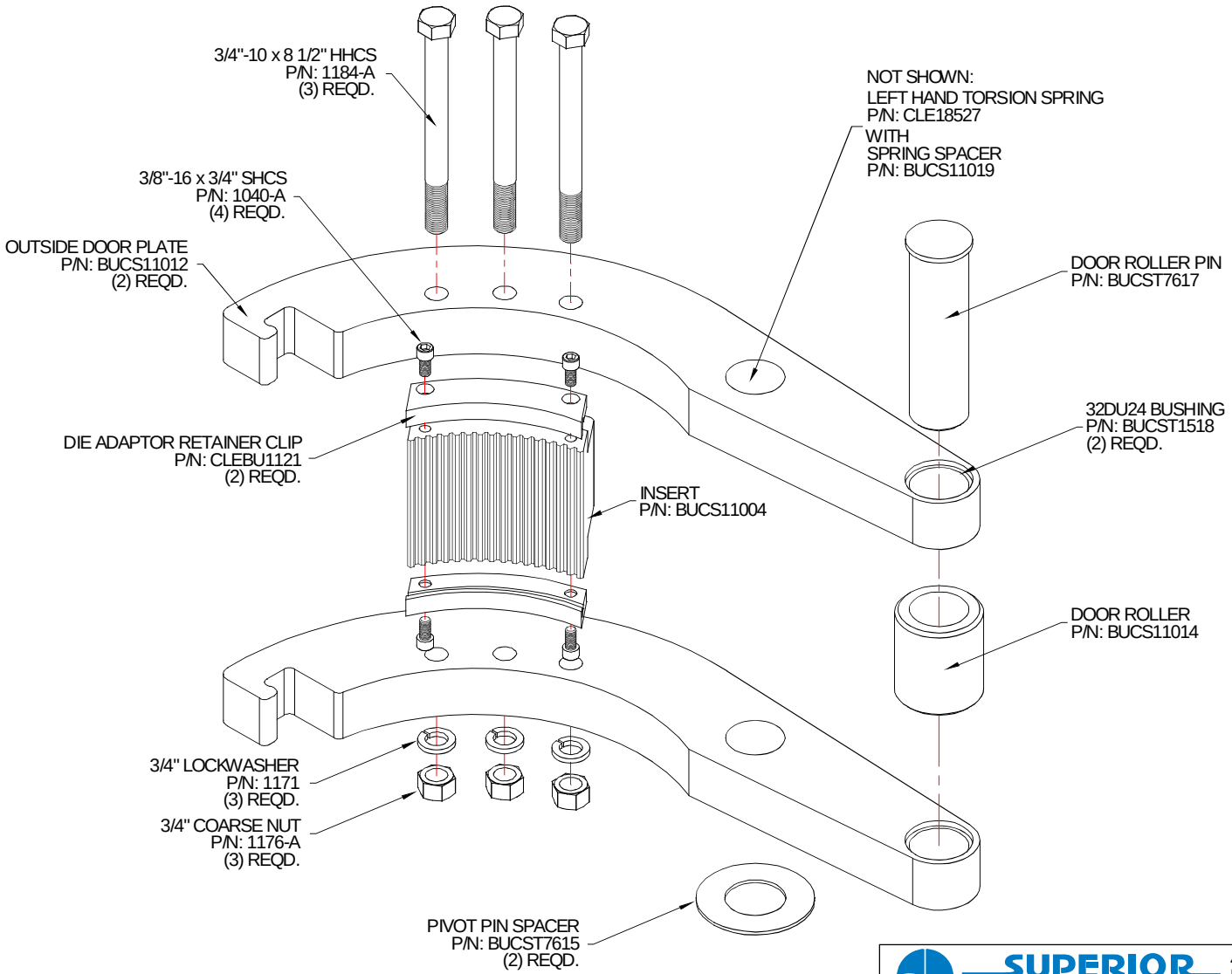

BACKUP OUTSIDE LEFT DOOR ASSEMBLY

SUPERIOR Manufacturing & Hydraulics
4225 HWY. 90 EAST
BROUSSARD, LA 70518
(318) 837-8847

THIS DOCUMENT IS THE PROPERTY OF SUPERIOR MANUFACTURING & HYDRAULICS AND IS CONSIDERED CONFIDENTIAL. THIS INFORMATION MAY NOT BE USED, DISCLOSED, COPIED, OR REPRODUCED IN ANY FORM, WITHOUT THE EXPRESS WRITTEN CONSENT OF SUPERIOR MANUFACTURING & HYDRAULICS.

REV. #	LOG #	DATE
1		06/26/01

REF: S:\Equip Manuals-Dwgs\CLEBU1175-21\Door Outside rev1.wpg

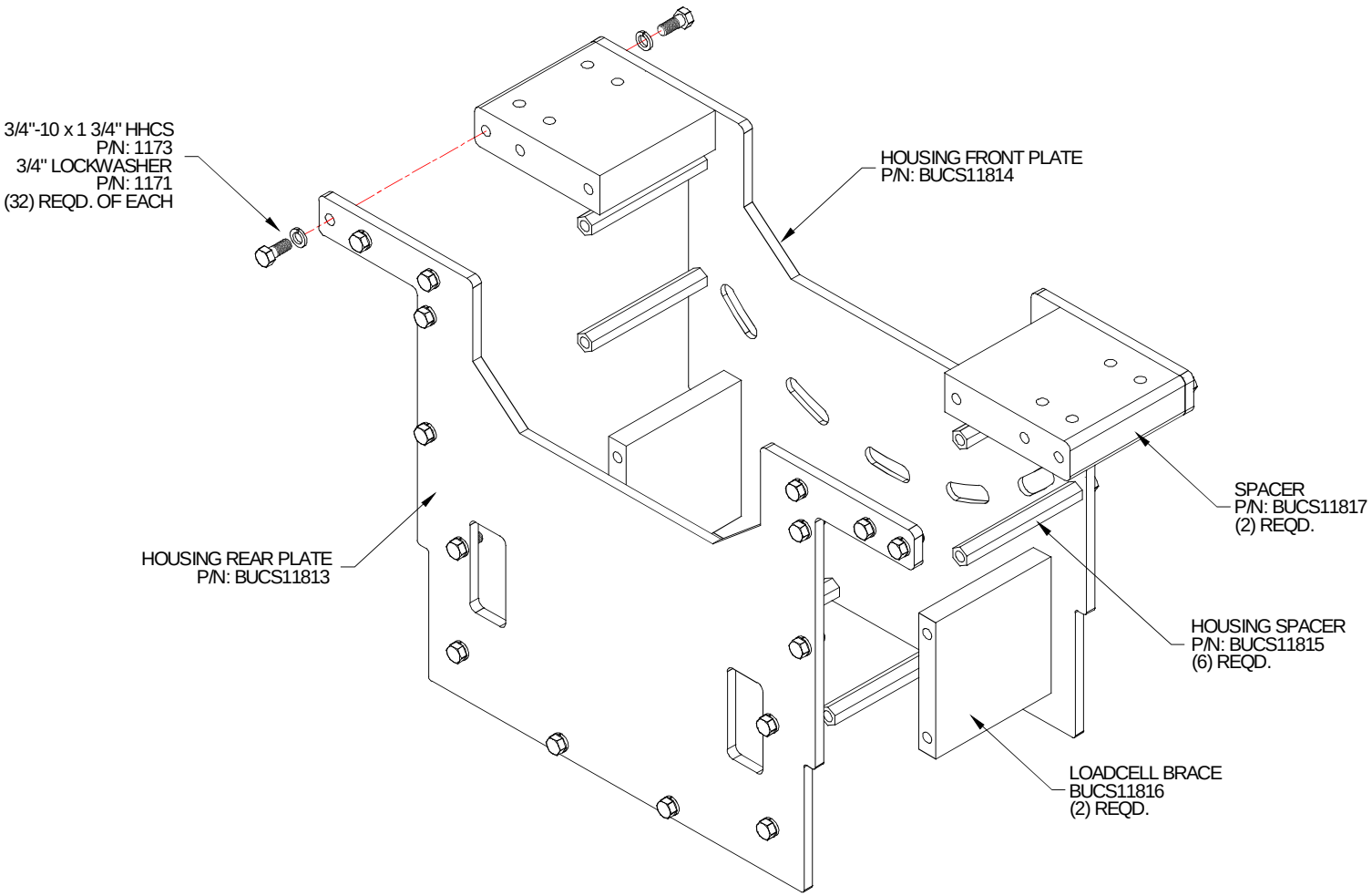

HOUSING ASSEMBLY

SUPERIOR Manufacturing & Hydraulics
4225 HWY. 90 EAST
BROUSSARD, LA 70518
(318) 837-8847

THIS DOCUMENT IS THE PROPERTY OF SUPERIOR MANUFACTURING & HYDRAULICS AND IS CONSIDERED CONFIDENTIAL. THIS INFORMATION MAY NOT BE USED, DISCLOSED, COPIED, OR REPRODUCED IN ANY FORM, WITHOUT THE EXPRESS WRITTEN CONSENT OF SUPERIOR MANUFACTURING & HYDRAULICS.

REV. #	LOG #	DATE
		01/21/00

REF: S:\Equip Manuals-Dwgs\CLEBU1175-21\Housing Assy.wpg

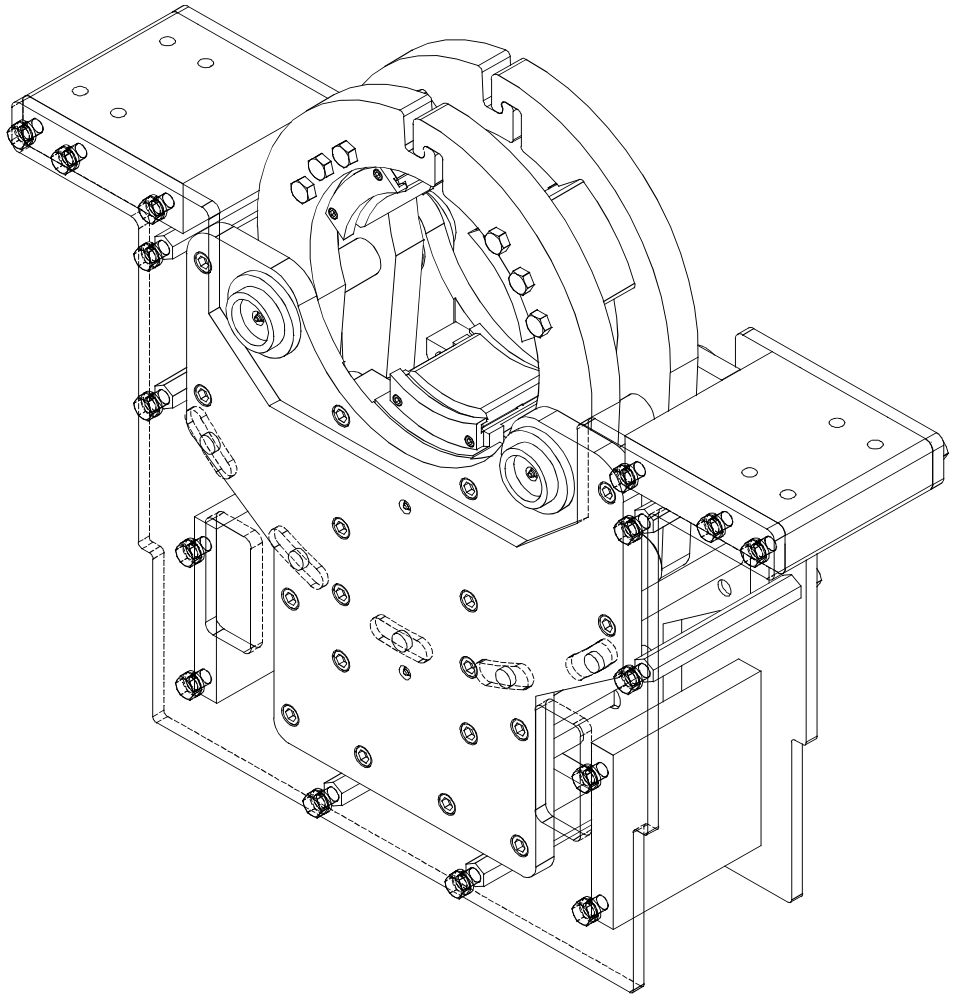

HOUSING AND BACKUP ASSEMBLY

SUPERIOR Manufacturing & Hydraulics
4225 HWY. 90 EAST
BROUSSARD, LA 70518
(318) 837-8847

THIS DOCUMENT IS THE PROPERTY OF SUPERIOR MANUFACTURING & HYDRAULICS AND IS CONSIDERED CONFIDENTIAL. THIS INFORMATION MAY NOT BE USED, DISCLOSED, COPIED, OR REPRODUCED IN ANY FORM, WITHOUT THE EXPRESS WRITTEN CONSENT OF SUPERIOR MANUFACTURING & HYDRAULICS.

REV. #	LOG #	DATE
		01/21/00

REF: S:\Equip Manuals-Dwgs\CLEBU1175-21\Housing & Backup.wpg

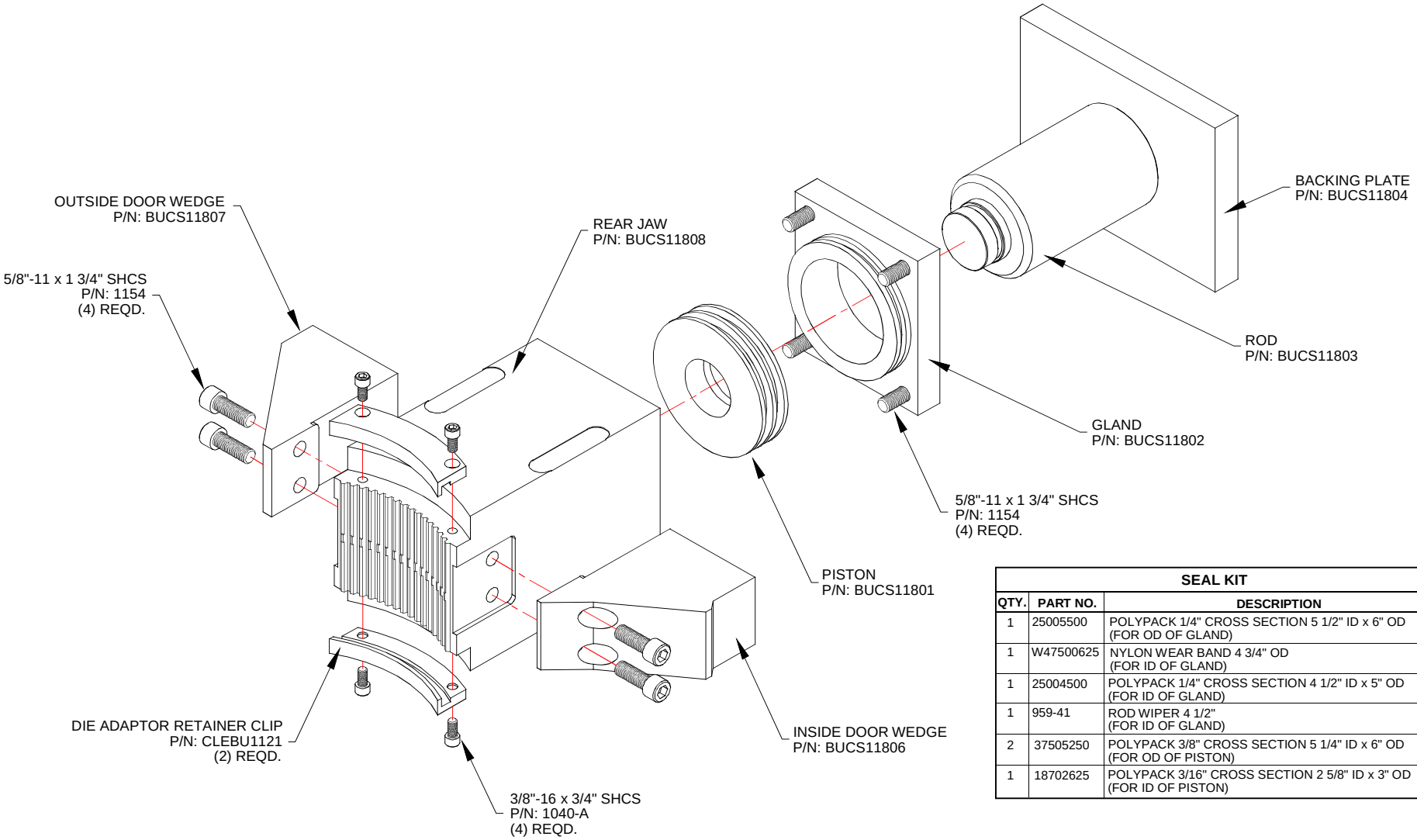

SEAL KIT		
QTY.	PART NO.	DESCRIPTION
1	25005500	POLYPACK 1/4" CROSS SECTION 5 1/2" ID x 6" OD (FOR OD OF GLAND)
1	W47500625	NYLON WEAR BAND 4 3/4" OD (FOR ID OF GLAND)
1	25004500	POLYPACK 1/4" CROSS SECTION 4 1/2" ID x 5" OD (FOR ID OF GLAND)
1	959-41	ROD WIPER 4 1/2" (FOR ID OF GLAND)
2	37505250	POLYPACK 3/8" CROSS SECTION 5 1/4" ID x 6" OD (FOR OD OF PISTON)
1	18702625	POLYPACK 3/16" CROSS SECTION 2 5/8" ID x 3" OD (FOR ID OF PISTON)

BACKUP CYLINDER ASSEMBLY

SUPERIOR Manufacturing & Hydraulics
4225 HWY. 90 EAST
BROUSSARD, LA 70518
(318) 837-8847

THIS DOCUMENT IS THE PROPERTY OF SUPERIOR MANUFACTURING & HYDRAULICS AND IS CONSIDERED CONFIDENTIAL. THIS INFORMATION MAY NOT BE USED, DISCLOSED, COPIED, OR REPRODUCED IN ANY FORM, WITHOUT THE EXPRESS WRITTEN CONSENT OF SUPERIOR MANUFACTURING & HYDRAULICS.

		01/24/00
REV. #	LOG #	DATE

REF: S:\Equip Manuals-Dwgs\CLEBU1175-21\Cylinder Assy.wpg

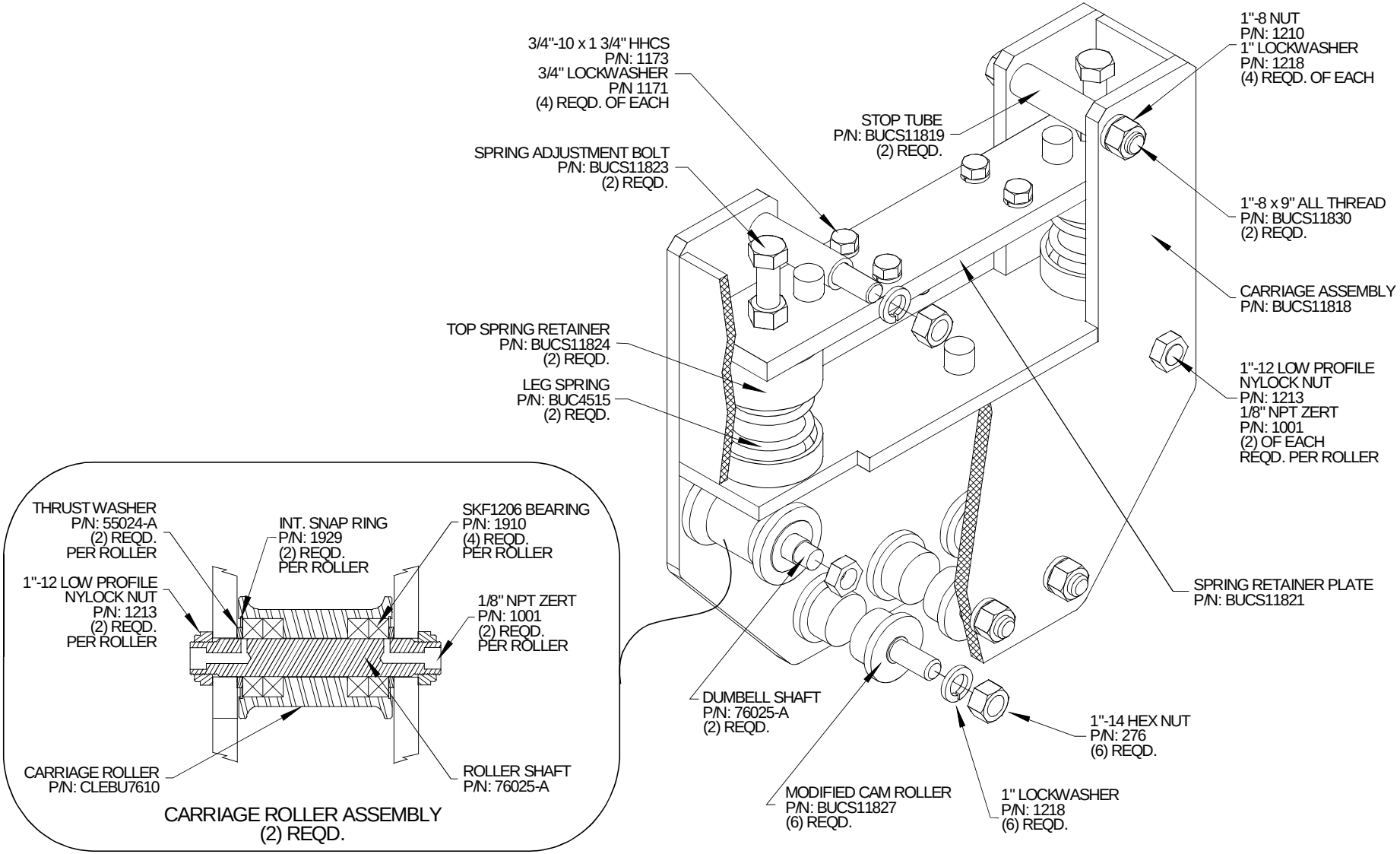

CARRIAGE ASSEMBLY

ASSEMBLY NUMBER CLEBU9636-03

SUPERIOR Manufacturing & Hydraulics
4225 HWY. 90 EAST
BROUSSARD, LA 70518
(318) 837-8847

THIS DOCUMENT IS THE PROPERTY OF SUPERIOR MANUFACTURING & HYDRAULICS AND IS CONSIDERED CONFIDENTIAL. THIS INFORMATION MAY NOT BE USED, DISCLOSED, COPIED, OR REPRODUCED IN ANY FORM, WITHOUT THE EXPRESS WRITTEN CONSENT OF SUPERIOR MANUFACTURING & HYDRAULICS.

REV. #	LOG #	DATE
1		06/26/01

REF: S:\Equip Manuals-Dwgs\CLEBU1175-21\Carriage Assy rev1.wpg

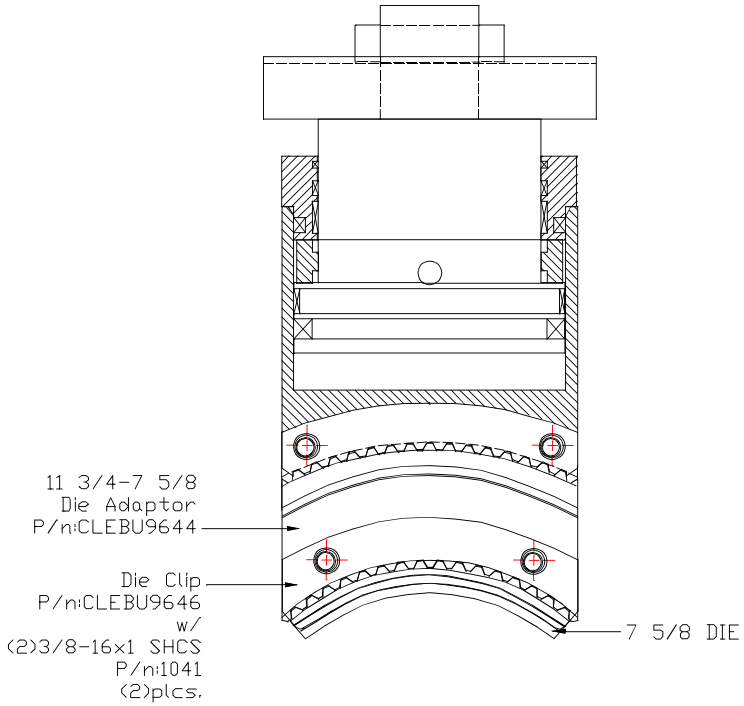

SECTION VIEW
11 3/4-7 5/8

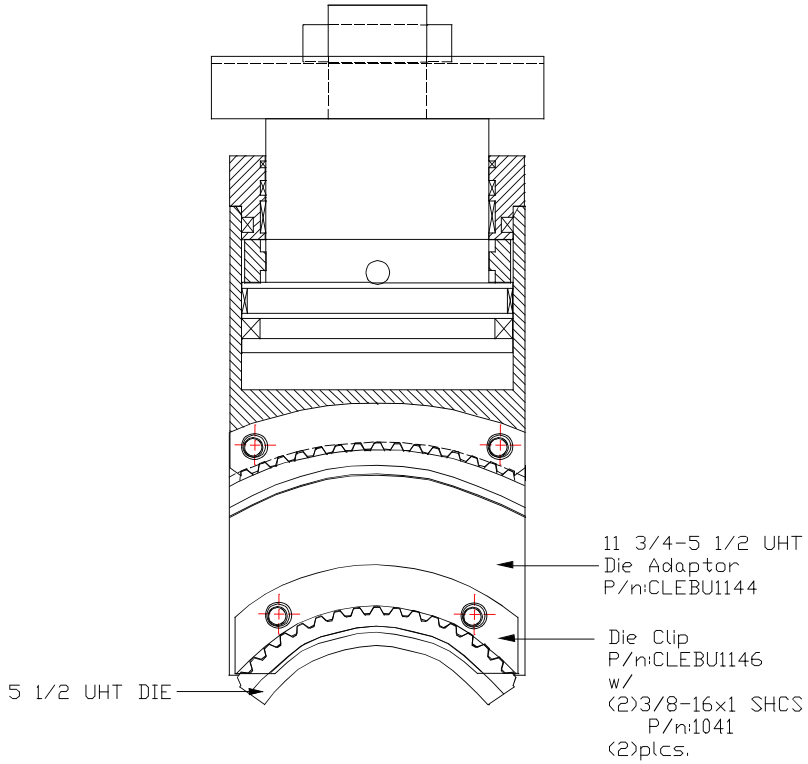

SECTION VIEW
11 3/4-5 1/2 UHT

UNLESS OTHERWISE SPECIFIED TOLERANCES ARE					
2 PLACE DEC. ±.020	3 PLACE DEC. ±.010	FRACTIONS ± 1/16	ANGLES ± .5°	SURFACE 250	FLATNESS ± .015 per foot

Rev.#	Log#	Description of Revision
3		
2		
1		

1. Dimensions are in inches
2. Remove burrs & sharp edges with 1/64x45°max.
3. Machined fillet radii are 1/32
4. Normality,Squareness & parallelism of machine surfaces are .002 per inch, to a max of .012 inches for a single surface.
5. Machine diameters on a common centerline must be concentric within .005 T.I.R & unmachined diameters concentric within .032 T.I.R

1 or 1 = Revision Number

1.000 = Critical Dimension 100% Inspection Required

SHEET 1 of 1

THIS DOCUMENT IS THE PROPERTY OF SUPERIOR MANUFACTURING & HYDRAULICS AND IS CONSIDERED CONFIDENTIAL. THIS INFORMATION MAY NOT BE USED, DISCLOSED, COPIED, OR REPRODUCED IN ANY FORM, WITHOUT THE EXPRESS WRITTEN CONSENT OF SUPERIOR MANUFACTURING & HYDRAULICS.

SUPERIOR Manufacturing & Hydraulics
4225 HWY.90 E
BROUSSARD,LA 70518
(318)837-8847

PART NAME: DIE ADAPTOR VARIATION FOR 11 3/4 BUCKING UNIT CLEBU1175

PART #: CLEBU1123	MATERIAL SPECIFICATION
DRAWN BY: NING M	Mat'l.Req:
REVISED BY:	Initial Condition:
REF: F:\DWG\CBU1123	H.T Instructions:
DATE: 1-26-98 REV.#:	Case Depth:

SECTION 10 MOTOR & PUMP SERVICE MANUALS

To request copy of Rineer Motor Service Manuals, Pump Service Manual & Technical Data, please contact:

Superior Manufacturing & Hydraulics
4225 Hwy. 90 East
Broussard, LA 70518
Phone: 337-837-8847
Fax: 337-837-8839
www.superior-manf.com

Note: Some **CLINCHER®** Bucking Units feature Rineer Motors with two rotor sections to provide greater output torque. Please contact SUPERIOR Manufacturing & Hydraulics for additional information concerning these motors, spare parts, and replacement procedures.

SECTION 11 GEAR REDUCER MANUAL

To request copy of SOM Gear Service Manual, please contact:

Superior Manufacturing & Hydraulics
4225 Hwy. 90 East
Broussard, LA 70518
Phone: 337-837-8847
Fax: 337-837-8839
www.superior-manf.com

SECTION 12 CONTROL VALVE TECHNICAL DATA

To request copy of Control Valve Technical Data, please contact:

Superior Manufacturing & Hydraulics
4225 Hwy. 90 East
Broussard, LA 70518
Phone: 337-837-8847
Fax: 337-837-8839
www.superior-manf.com

PARTS LIST

EPP-1100 Electrically Driven Hydraulic Power Unit

30 Horsepower, 3 phase, 480 V, 13.4/38.5 GPM, 3,000 PSI Power Unit with Hi/Lo Unloader

Description	*Manufacturer*	*Model Number*
Reservoir	Vescor	VL-120
30 HP Electric Motor	Marathon	U726
Pump/Motor Adapter	Vescor	1979
Motor/Pump Coupling	Reuland	RC40875187 RC41875500
Motor/Pump Coupling Spider	Reuland	RC4RG4P9
Suction Strainer	Flow-Ez	50-1 1/2-100
Two Stage Hydraulic Pump	Vickers	2520VQ21A11-1DB20L
Hi/Lo Unloader Valve	Rivett	8827-06-25
Relief Valve	Rivett	8821-06-25
Flow Control Valve	Brand Hydraulics	FC51-1 1/4"
Return Filter Cartridge Assembly	Donaldson	HAK05-0017

Note: Standard industrial hydraulic system components including hydraulic hoses, pipe fittings, and low pressure suction isolation valve components are not specifically identified.

Note: This Power Unit features a two stage pump system with a Hi/Lo Unloading Valve with integral pressure relief valve. The first stage of this unit will deliver 25 gpm, the second stage will deliver 13.5 gpm. The Hi/Lo Unloader Valve has been set at the factory to dump the first stage at pressures above +/- 1000 psi. The integral pressure relief valve has been set to relieve at approximately 3,000 psi. The combination of these components produce a total output of 38.5 gpm at pressures up to +/- 1000 psi and 13.5 at pressures from 1000 psi to 2,500. End users may adjust these settings provided (1) maximum pressure of second stage (13.5 gpm) is not allowed to exceed 3000 psi and (2) maximum first stage unloading pressure does not exceed 1200 psi. If the latter event is allowed to occur, excessive power demands will be placed on the motor causing overheating and potential premature failures. Hydraulic horsepower requirements can be calculated using the following formula:

Hyd HP = (max flow (gpm) x max pressure (psi)) / 1714

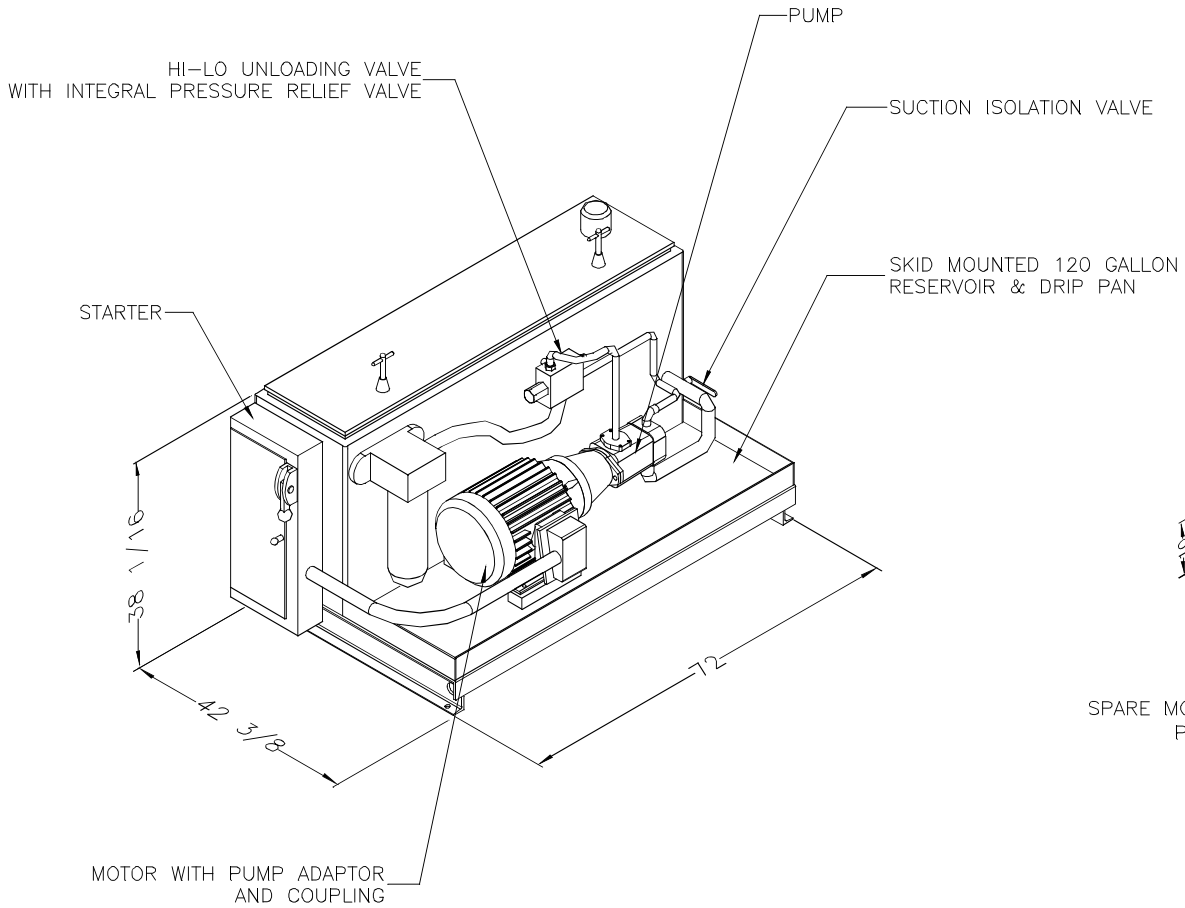

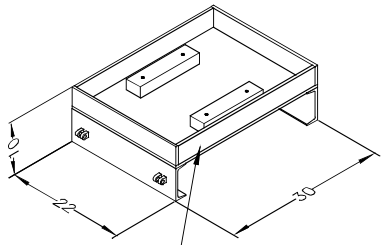

NOTE: Suction strainer is installed inside tank and is not shown.

Rev.#	Log#	Description of Revision
3		
2		
1		

THIS DOCUMENT IS THE PROPERTY OF SUPERIOR MANUFACTURING & HYDRAULICS AND IS CONSIDERED CONFIDENTIAL. THIS INFORMATION MAY NOT BE USED, DISCLOSED, COPIED, OR REPRODUCED IN ANY FORM, WITHOUT THE EXPRESS WRITTEN CONSENT OF SUPERIOR MANUFACTURING & HYDRAULICS.

UNLESS OTHERWISE SPECIFIED TOLERANCES ARE

2 PLACE DEC.	3 PLACE DEC.	FRACTIONS	ANGLES	SURFACE	FLATNESS
±.020	±.010	± 1/16	± .5°	250	± .015 per foot

1. Dimensions are in inches
2. Remove burrs & sharp edges with 1/64x45°max.
3. Machined fillet radii are 1/32
4. Normality,Squareness & parallelism of machine surfaces are .002 per inch, to a max of .012 inches for a single surface.
5. Machine diameters on a common centerline must be concentric within .005 T.I.R & unmachined diameters concentric within .032 T.I.R

1 or 1 = Revision Number

1.000 = Critical Dimension 100% Inspection Required

SHEET 1 of 1

SUPERIOR Manufacturing & Hydraulics
4225 HWY.90 E
BROUSSARD,LA 70518
(318)837–8847

PART NAME: ELECTRICALLY DRIVEN HYDRAULIC POWER UNIT
30hp, 3ø, 13.5/38.5 GPM, 3000psi

PART #: EPP1100

DRAWN BY: MARK F GRAVOUIA

REVISED BY:

REF: F:\DWG\EPP1100

DATE: 12/12/97 REV.#:

MATERIAL SPECIFICATION

Matl.Req:

Initial Condition:

Stk.Size:

H.T Instructions: Case Depth:

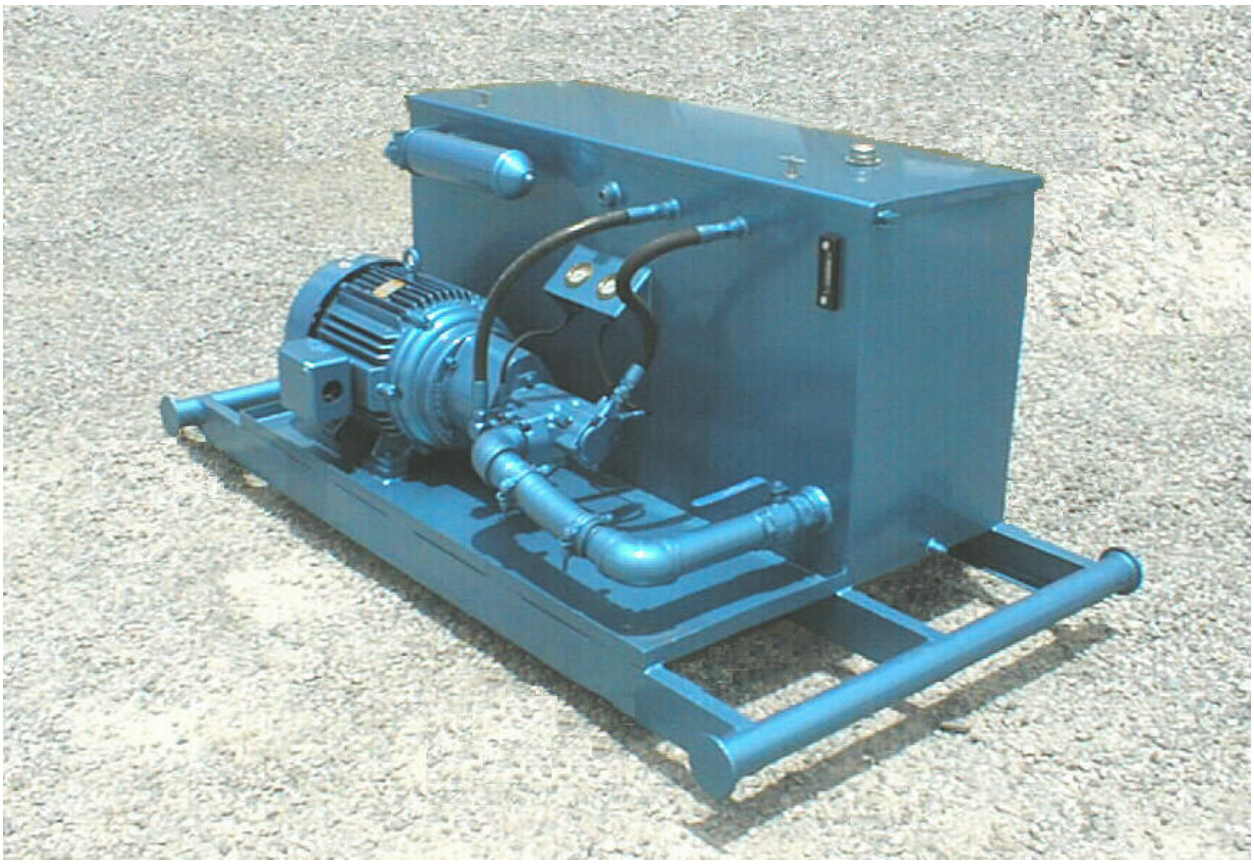

Photo 2

HYDRAULIC POWER UNIT

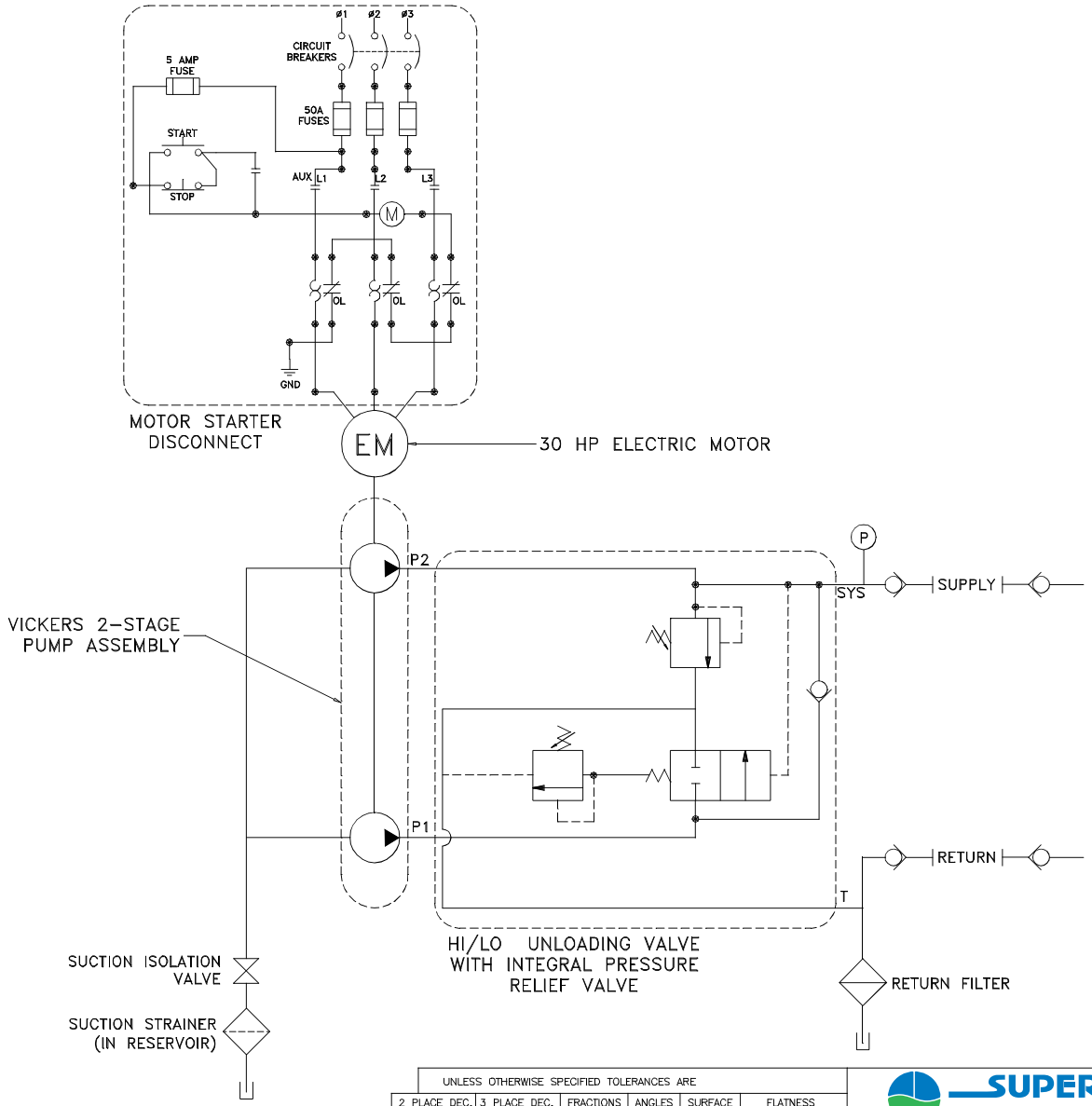

UNLESS OTHERWISE SPECIFIED TOLERANCES ARE

2 PLACE DEC.	3 PLACE DEC.	FRACTIONS	ANGLES	SURFACE	FLATNESS
±.020	±.010	± 1/16	± .5°	250	± .015 per foot

SUPERIOR Manufacturing & Hydraulics
4225 HWY.90 E
BROUSSARD,LA 70518
(318)837-8847

Rev.#	Log#	Description of Revision
3		
2		
1		

1. Dimensions are in inches
2. Remove burrs & sharp edges with 1/64x45°max.
3. Machined fillet radii are 1/32
4. Normality,Squareness & parallelism of machine surfaces are .002 per inch, to a max of .012 inches for a single surface.
5. Machine diameters on a common centerline must be concentric within .005 T.I.R & unmachined diameters concentric within .032 T.I.R

△1 or ⬡1 = Revision Number

|1.000| = Critical Dimension 100% Inspection Required

SHEET 1 of 1

PART NAME: 30HP – 3ø HYDRAULIC POWER SUPPLY 9 5/8, 10 3/4, & 11 3/4 TYPE 1 BUCKING UNITS

PART #: ill1086
DRAWN BY: MARK F GRAVOUIA
REVISED BY:
REF: F:\ill1000\ill1086
DATE: 11/20/97
REV.#:

MATERIAL SPECIFICATION
Matl.Req:
Initial Condition:
Stk.Size:
H.T Instructions:
Case Depth:

THIS DOCUMENT IS THE PROPERTY OF SUPERIOR MANUFACTURING & HYDRAULICS AND IS CONSIDERED CONFIDENTIAL. THIS INFORMATION MAY NOT BE USED, DISCLOSED, COPIED, OR REPRODUCED IN ANY FORM, WITHOUT THE EXPRESS WRITTEN CONSENT OF SUPERIOR MANUFACTURING & HYDRAULICS.

SECTION 14 HYDRAULIC POWER UNIT COMPONENT INFORMATION

To request copy of Hydraulic Power Unit Component Information, please contact:

Superior Manufacturing & Hydraulics
4225 Hwy. 90 East
Broussard, LA 70518
Phone: 337-837-8847
Fax: 337-837-8839
www.superior-manf.com